COUNTY GOVERNMENT OF MERU

DEPARTMENT OF ROADS, TRANSPORT AND ENERGY

(COUNTY WARD FUND)

TENDER NUMBER:CGM/ONT/038/2017-2018

TENDER NAME: GRADING AND GRAVELLING WORKS IN ANTUBETWE/KIONGO WARD

ROAD NAME:

1. **St Joseph Kaaru-Marere road 3km;**
2. **Antubetwe mkt-Mwenje canteen road 1.5km;**
3. **Karichu-Kathatene road 2km.**
   1.

BID DOCUMENT FOR SPOT IMPROVEMENT

- **INVITATION FOR TENDERS**
- **INSTRUCTIONS TO BIDDERS**
- **QUALIFICATION CRITERIA**
- **CONDITIONS OF CONTRACT**
- **APPENDIX TO FORM OF TENDER**
- **STANDARD FORMS**
- **SPECIFICATIONS, DRAWINGS AND BILLS OF QUANTITIES**

2018

The Engineer	**The Employer**
CHIEF OFFICER **ROADS, TRANSPORT AND ENERGY** **COUNTY GOVERNMENT OF MERU** **P.O. BOX 120 - 60200,** **MERU.**	**THE GOVERNOR,** **COUNTY GOVERNMENT OF MERU** **P.O. BOX 120 - 60200,** **MERU.**

STANDARD TENDER DOCUMENT

FOR

SPOT IMPROVEMENT WORKS

- COUNTY WARD FUND

TABLE OF CONTENTS

CONTENTS **PAGE NO.**

SECTION I: INVITATION FOR TENDERS **3**

SECTION II: INSTRUCTIONS TO TENDERERS **3**

SECTION III: QUALIFICATION CRITERIA **13**

SECTION IV: CONDITIONS OF CONTRACT **14**

SECTION V: APPENDIX TO FORM OF TENDER **27**

SECTION VI: STANDARD FORMS ..... ERROR! BOOKMARK NOT DEFINED.

SECTION VII: CONTRACTOR'S EVALUATION CHECKLIST .. ERROR! BOOKMARK NOT DEFINED.

SECTION VIII: SPECIFICATIONS, DRAWINGS AND BILLS OF QUANTITIES ERROR! BOOKMARK NOT DEFINED.

SECTION I: INVITATION FOR TENDERS

INVITATION TO TENDER NOTICE

COUNTY GOVERNMENT OF MERU

ROADS, TRANSPORT AND ENERGY

P.O. Box 120-60200 Meru

2018

(COUNTY WARD FUND FY2017/2018)

The County Government of Meru (Roads, Transport and Energy Department) is a Government established under the Kenya Constitution 2010 and County Government Acts 2012 with the responsibility for management, development, rehabilitation, and maintenance of county roads. The Department wishes to invite quotations from competent eligible pre-qualified firms for Road Works as listed in the table below.

SUB COUNTY- IGEMBE NORTH					NCA
1	Tender No.	Tender Name: Grading And Gravelling Works In Antubetwe/Kiongo Ward	Routine maintainace	Citizen	8 and above

A complete set of Tender documents and more detailed information may be downloaded free of charge from the County Government of Meru tender portal **website: www.meru.go.ke**

There will be Mandatory pretender site visit as per schedule below:

Road	Date and time	Venue
As listed above	20 - 02 -2018 at 2.00 pm	Antubetwe Market

MANDATORY REQUIREMENTS

1. Certified Copy of certificates of incorporation.
2. Attach pin/vat certificate
3. Attach valid business permit
4. Bid security BID - Unconditional guarantee, in the format and conditions provided must be valid for 120days`
5. Eligibility - Copy of National ID or passport for all Directors
6. Certified Copy of valid Tax compliance certificate
7. Certified license with National Construction Authority (NCA 8 and above)
8. Certificate of registration in target group issued by the national treasury (for the special groups only)
9. Proof of financial soundness: financial statements.
10. Proof of attending mandatory pre-tender site visit for the works.
11. Properly and dully filled tender securing declaration forms ; stamped and/or sealed; signed with some authorized to do so.(for the special groups only)
12. All documents must be bound for each bid submitted. All forms filled appropriately
13. Meet eligibility criteria on : Preliminary ,Technical and Financial as per the tender document and instruction to bidders

Bidders must ensure that their completed tender documents are enclosed in plain sealed envelopes marked with Tender name and reference number and deposited in the Tender Box situated at the County Headquarters ground floor **opposite Huduma Centre Meru** addressed to:

The County Secretary
County Government of Meru,
County Headquarter Office,
P.O. Box 120-60200, MERU

To be received on or before the date provided below. Opening will take place immediately thereafter. Bidders or their representatives wishing to witness the opening may attend.

Sub county	Date and closing time & opening	Venue
Igembe North	5th March, 2018 at 10.00am	County Headquarter Office

CHIEF OFFICER
ROADS, TRANSPORT AND ENERGY

SECTION II: INSTRUCTIONS TO TENDERERS

TABLE OF CONTENTS

CLAUSE		PAGE.
1.	GENERAL	6
2.	TENDER DOCUMENTS	8
3.	PREPARATION OF TENDERS	8
4.	SUBMISSION OF TENDERS	9
5.	TENDER OPENING AND EVALUATON	10
6.	AWARD OF CONTRACT	12

INSTRUCTIONS TO TENDERERS.

1. General

1.1 The Employer as defined in the Appendix to Conditions of Contract invites tenders for Works Contract as described in the tender documents. The successful Tenderer will be expected to complete the Works by the Intended Completion Date specified in the said Appendix.

1.2 Tenderers shall include the following information and documents with their tenders, unless otherwise stated:

(a) All documents must be bound for each bid submitted. All forms filled appropriately

(b) Copies of certificates of registration, and principal place of business;
(c) Total monetary value of construction work performed for each of the last three years;
(d) Experience in works of a similar nature and size for each of the last five years, and clients who may be contacted for further information on these contracts;
(e) Mandatory items of construction equipment owned;
(f) Qualifications and experience of key site management and technical personnel proposed for the Contract;
(g) Reports on the financial standing of the Tenderer, such as profit and loss statements and auditor's reports for the last three years;
(h) Authority to seek references from the Tenderer's bankers.
(i) Registration with National Construction Authority for the applicable class valid at the date of tender of submission
(j) Certificate of Incorporation
(k) Valid current Tax compliance certificate
(l) PIN registration certificate
(m) Current litigation information
(n) Bid security- Unconditional guarantee, in the format and conditions provided and must be valid for 120days
(o) Eligibility - Copy of National ID or passport for all Directors

1.3 The Tenderer shall bear all costs associated with the preparation and submission of his tender, and the Employer will in no case be responsible or liable for those costs.

1.4 The Tenderer, at the Tenderer's own responsibility and risk, is encouraged to visit and examine the Site of the Works and its surroundings, and obtain all information that may be necessary for preparing the tender and entering into a contract for construction of the Works. The costs of visiting the Site shall be at the Tenderer's own expense.

1.5 The procurement entity's employees, committee members and their relative (spouse and children) are not eligible to participate in the tender.

1.6 The estimated budget for these works is **Kshs Three million one hundred and twenty six thousand, two hundred shillings only (Kshs 3,126,200.00)**

2. Tender Documents

2.1 The complete set of tender documents comprises the documents listed here below and any addenda issued in accordance with clause 2.4 here below:-

(a) The instructions to Tenderers
(b) Form of Tender
(c) Conditions of Contract and Appendix to Form of Agreement
(d) Specifications
(e) Drawings
(f) Bills of Quantities
(g) Other materials required to be filled and submitted in accordance with these Instructions and Conditions

2.2 The Tenderer shall examine all instructions, forms and specifications in the tender documents. Failure to furnish all information required by the tender documents may result in rejection of his tender.

2.3 A prospective Tenderer making inquiry of the tendering documents may notify the Employer in writing or by cable, telex or facsimile at the address indicated in the letter of invitation to tender. The Employer will respond to any request for clarification received earlier than seven [7] days prior to the deadline for submission of tenders. Copies of the Employer's response will be forwarded to all persons issued with tendering documents, including a description of the inquiry, but without identifying its source.

2.4 Before the deadline for submission of tenders, the Employer may modify the tendering documents by issuing addenda. Any addendum thus issued shall be part of the tendering documents and shall be communicated in writing or by cable, telex or facsimile to all Tenderers. Prospective Tenderers shall acknowledge receipt of each addendum in writing to the Employer.

2.5 To give prospective Tenderers reasonable time in which to take an addendum into account in preparing their tenders, the Employer shall extend, as necessary, the deadline for submission of tenders in accordance with clause 4.2 here below.

3. Preparation of Tenders

3.1 All documents relating to the tender and any correspondence shall be in English Language.

3.2 The tender submitted by the Tenderer shall comprise the following:-

(a) The Tender;

(b) Tender Security;

(c) Priced Bill of Quantities for lump-sum Contracts

(d) Any other materials required to be completed and submitted by Tenderers.

3.3 The Tenderer shall fill in rates and prices for all items of the Works described in the Bill of Quantities. Items for which no rate or price is entered by the Tenderer will not be paid for when executed and shall be deemed covered by the other rates and prices in the Bill of Quantities. All duties, taxes and other levies payable by the Contractor under the Contract, as of 30 days prior to the deadline for submission of tenders, shall be included in the tender price submitted by the Tenderer.

3.4 The rates and prices quoted by the Tenderer shall not be subject to any adjustment during the performance of the Contract.

3.5 The unit rates and prices shall be in Kenya Shillings.

3.6 Tenders shall remain valid for a period of **One Twenty (120**) days from the date of submission. However in exceptional circumstances, the Employer may request that the Tenderers extend the period of validity for a specified additional period. The request and the Tenderers' responses shall be made in writing.

3.7 The Tenderer shall prepare one original of the documents comprising the tender documents as described in these Instructions to Tenderers.

3.8 The original shall be typed or written in indelible ink and shall be signed by a person or persons duly authorised to sign on behalf of the Tenderer. All pages of the tender where alterations or additions have been made shall be initialed by the person or persons signing the tender.

3.9 Clarification of tenders shall be requested by the tenderer to be received by the procuring entity not later than 7 days prior to the deadline for submission of tenders.

3.10 The procuring entity shall reply to any clarifications sought by the tenderer within **7 days** of receiving the request to enable the tenderer to make timely submission of its tender.

4. Submission of Tenders

4.1 The tender duly filled and sealed in an envelope shall;-

(a) be addressed to the Employer at the address provided in the invitation to tender;

[b] bear the name and identification number of the Contract as defined in the invitation to tender; and

[c] provide a warning not to open before the specified time and date for tender opening.

4.2 Tenders shall be delivered to the Employer at the address specified above not later than the time and date specified in the invitation to tender.

4.3 The tenderer shall not submit any alternative offers unless they are specifically required in the tender documents.

Only one tender may be submitted by each tenderer. Any tenderer who fails to comply with this requirement will be disqualified.

4.4 Any tender received after the deadline for opening tenders will be returned to the tenderer un-opened.

4.5 The Employer may extend the deadline for submission of tenders by issuing an amendment in accordance with sub-clause 2.5 in which case all rights and obligations of the Employer and the Tenderers previously subject to the original deadline will then be subject to the new deadline.

5. Tender Opening and Evaluation

5.1 The tenders will be opened in the presence of the Tenderers' representatives who choose to attend at the time and in the place specified in the invitation to tender.

5.2 The Tenderers' names, the total amount of each tender including any modification and number of pages submitted, will be announced at the opening by the Employer. Minutes of the tender opening, including the information disclosed to those present will also be prepared by the Employer.

5.3 Information relating to the examination, clarification, evaluation and comparison of tenders and recommendations for the award of the Contract shall not be disclosed to Tenderers or any other persons not officially concerned with such process until the award to the successful Tenderer has been announced.

Any effort by a Tenderer to Influence the Employer's officials, processing of tenders or award decisions may result in the rejection of his tender

.

5.4 Tenders determined to be substantially responsive will not be checked for errors and shall not be affected by:

(a) Minor deviation that does not materially depart from the requirements set out in the tender document.

(b) Errors or oversight that can be corrected without affecting the substance of the tender

(c) The tender sum as submitted and read out during the tender opening shall be absolute and final and shall not be the subject of correction, adjustment or amendment in any way by any person or entity.

5.5 The tender evaluation committee shall evaluate the tender within 30 days of the validity period from the date of opening the tender.

5.6 Contract price variations shall not be allowed for contracts not exceeding one year (12 months)

5.7 Where contract price variation is allowed, the valuation shall not exceed 25% of the original contract price.

5.8 Price variation requests shall be processed by the procuring entity within 30 days of receiving the request

5.9 To assist in the examination, evaluation, and comparison of tenders, the Employer at his discretion, may request [in writing] any Tenderer for clarification of the tender, including breakdowns of unit rates. The request for clarification and the response shall be in writing or by cable, telex or facsimile but no change in the tender price or substance of the tender shall be sought, offered or permitted.

5.10 The Tenderer shall not influence the Employer on any matter relating to his tender from the time of the tender opening to the time the Contract is awarded. Any effort by the Tenderer to influence the Employer or his employees in his decision on tender evaluation, tender comparison or Contract award may result in the rejection of the tender.

6. Award of Contract

6.1 The award of the Contract will be made to the Tenderer who has offered **the most responsive evaluated tender.**

6.2 Notwithstanding the provisions of clause 6.1 above, the Employer reserves the right to accept or reject any tender and to cancel the tendering process and reject all tenders at any time prior to the award of Contract without thereby incurring any liability to the affected Tenderer or Tenderers or any obligation to inform the affected Tenderer or Tenderers of the grounds for the action.

6.3 The Tenderer whose tender has been accepted will be notified of the award prior to expiration of the tender validity period in writing or by cable, telex or facsimile. This notification (hereinafter and in all Contract documents called the “Notification of award”) will state the sum [hereinafter and in all Contract documents called the “Contract Price” which the Employer will pay the Contractor in consideration of the execution, completion, and maintenance of the Works by the Contractor as prescribed by the Contract. The contract shall be formed on the parties signing the contract. At the same time the other tenderers shall be informed that their tenders have not been successful.

The Contract Agreement will incorporate all agreements between the Employer and the successful Tenderer. It will be signed by the Employer and sent to the successful Tenderer, within 30 days following the notification of award. Within 21 days of receipt, the successful Tenderer will sign the Agreement and return it to the Employer. 6.5 Within 21 days after receipt of the Letter of Acceptance, the successful Tenderer shall deliver to the Employer a Performance Security amount stipulated in the Appendix to Conditions of Contract.

6.6 The parties to the contract shall have it signed within 30 days from the date of notification of contract award unless there is an administrative review request.

6.7 The procuring entity may at any time terminate procurement proceedings before contract award and shall not be liable to any person for the termination.

6.8 The procuring entity shall give prompt notice of the termination to the tenderers and on request give its reasons for termination within 14 days of receiving the request from any tenderer.

7. Corrupt and fraudulent practices

7.1 The procuring entity requires that the tenderer observes the highest standard of ethics during the procurement process and execution of the contract. A tenderer shall sign a declaration that he has not and will not be involved in corrupt and fraudulent practices.

7.2 The procuring entity will reject a tender if it determines that the tenderer recommended for award has engaged in corrupt and fraudulent practices in competing for the contract in question.

7.3 Further a tenderer who is found to have indulged in corrupt and fraudulent practices risks being debarred from participating in public procurement in Kenya.

SECTION III: QUALIFICATION CRITERIA

1.0 Preliminary examination			
	Criteria		
1	**ELIGIBILITY - Copy of National ID or passport for all Directors**	**Mandatory**	
2	**BID SECURITY - Unconditional guarantee, in the format and conditions provided Must be valid for 120 days**	**Mandatory**	
3	**All documents must be bound for each bid submitted**	**Mandatory**	
4	**Proof of attending pre-tender site visit for the works.**	**Mandatory**	
5	**Proof of registration**	**Mandatory**	
6	**Certified Copy of certificates of incorporation.**	**Mandatory**	
7	**Certified Certificate of registration with National Construction Authority (NCA 8 and above)**	**Mandatory**	
8	**Certified Copy of valid Tax compliance certificate**	**Mandatory**	
9	**Certificate of registration in target group issued by the national treasury**	**Mandatory**	
10	**Properly and dully filled Form of Tender; stamped and/or sealed; signed with some authorized to do so.**	**Mandatory**	
11	**Properly and dully filled bill of quantities; stamped and/or sealed; signed with some authorized to do so.**	**Mandatory**	
12	**Properly and dully filled tender securing declaration forms; stamped and/or sealed; signed with some authorized to do so.**	**Mandatory**	

PROJECT NAME:.....

TENDER NUMBER:.....

EVALUATION CRITERIA

NAME OF THE CONTRACTOR.....

	REQUIREMENTS	MARKS	SCORE	REMARKS
1	**Mandatory Requirements** 1. Certificate of Incorporation/Registration 2. Pin /VAT Certificate 3. Valid Tax compliance 4. Certificate of Registration from NCA(1-8) 5. Trading license/Single Business permit 6. 2% Bid bond valid for 120 days/dully filled tender securing declaration form for special group 7. Copy of National ID or passport for all Directors 8. Proof of attending pre-tender site visit for the works. 9. Certificate of registration in target group issued by the national treasury 10. Properly and dully filled Form of Tender; stamped and/or sealed; signed with some authorized to do so. 11. Properly and dully filled bill of quantities; stamped and/or sealed; signed with some authorized to do so. 12. Properly and dully filled tender securing declaration forms; stamped and/or sealed; signed with some authorized to do so.			
2	**TECNICAL EVALUATION** **Registration as a contractor with NCA** 1. NCA 1 [roads] 2. NCA 2 [roads] 3. NCA 3 [roads] 4. NCA 4 [roads] 5. NCA 5 [roads] 6. NCA 6 [roads]	 15 13 11 9 7		

	7. NCA 7 [roads] 8. NCA 8 [roads]	5 3 2		
3	**Experience of the contractor** 1. Years of practice a. 5 and above b. 4 c. 3 d. 2 e. Below 1	 20 16 12 9 6		
4	**The value of your biggest project undertaken** a) Less than Kshs 1 million b) Kshs. 1 – 2 million c) Kshs. 2.1-5 million d) Kshs. 5.1-10 million e) Over Kshs. 11 million **NB:** *(Attach proof i.e copies of completion certificate, LPO or award letters.)*	 1 5 10 15 20		
5	**Provide audited financial records for last two years**	10		
6	**Company turnover for the last two years** a) Less than Kshs. 1 million b) Kshs. 1 – 2 million c) Kshs. 2- 3 million d) Over Kshs. 3 million	 5 10 15 20		
7	**Profitability of the company for the last two years** a) Less than Kshs. 100,000 profit b) Kshs. 1-2 million profit c) Kshs. 2-4 million profit d) Above Kshs. 5,000,000 Million	 4 6 8 10		
8	**CVs of key personnel** Degree in the relevant field Diploma in the relevant field Craft certificate in the relevant field	 5 3 2		

	TOTAL SCORE			

SECTION IV: CONDITIONS OF CONTRACT

Table of Clauses **Page**

1. DEFINITIONS…… 20

2. CONTRACT DOCUMENTS…… 21

3. EMPLOYER'S REPRESENTATIVE'S DECISIONS…… 21

4. WORKS, LANGUAGE AND LAW OF CONTRACT……. 22

5. SAFETY, TEMPORARY WORKS AND DISCOVERIES…….. 22

6. WORK PROGRAM AND SUB-CONTRACTING…….. 22

7. THE SITE……. 22

8. INSTRUCTIONS…… 23

9. EXTENSION OF COMPLETION DATE…….. 23

10. MANAGEMENT MEETINGS……. 24

11. DEFECTS…… 24

12. BILLS OF QUANTITIES……. 25

13. VARIATIONS…….. 25

14. PAYMENT CERTIFICATES AND FINAL ACCOUNT …… 26

15. INSURANCES ……. 27

16. LIQUIDATED DAMAGES…… 27

17. COMPLETION AND TAKING OVER…… 27

18. TERMINATION…… 27

19. PAYMENT UPON TERMINATION…… 28

20. CORRUPT GIFTS AND PAYMENTS OF COMMISSION…… 28

21. SETTLEMENT OF DISPUTES…… 29

CONDITIONS OF CONTRACT

1. Definitions

1.1 In this Contract, except where context otherwise requires, the following terms shall be interpreted as indicated;

"Bills of Quantities" means the priced and completed Bill of Quantities forming part of the tender [where applicable].

"Schedule of Rates" means the priced Schedule of Rates forming part of the tender [where applicable].

"The Completion Date" means the date of completion of the Works as certified by the Employer's Representative.

"The Contract" means the agreement entered into by the Employer and the Contractor as recorded in the Agreement Form and signed by the parties.

"The Contractor" refers to the person or corporate body whose tender to carry out the Works has been accepted by the Employer.

"The Contractor's Tender" is the completed tendering document submitted by the Contractor to the Employer.

"The Contract Price" is the price stated in the Letter of Acceptance.

"Days" are calendar days; "Months" are calendar months.

"A Defect" is any part of the Works not completed in accordance with the Contract.

"The Defects Liability Certificate" is the certificate issued by Employer's Representative upon correction of defects by the Contractor.

"The Defects Liability Period" is the period named in the Appendix to Conditions of Contract and calculated from the Completion Date.

"Drawings" include calculations and other information provided or approved by the Employer's Representative for the execution of the Contract.

“Employer” Includes Central or County Government administration, Universities, Public Institutions and Corporations and is the party who employs the Contractor to carry out the Works.

“Equipment” is the Contractor’s machinery and vehicles brought temporarily to the Site for the execution of the Works.

“Site” means the place or places where the permanent Works are to be carried out including workshops where the same is being prepared.

“Materials” are all supplies, including consumables, used by the Contractor for incorporation in the Works.

“Employer’s Representative” is the person appointed by the Employer and notified to the Contractor for the purpose of supervision of the Works.

“Specification” means the Specification of the Works included in the Contract.

“Start Date” is the date when the Contractor shall commence execution of the Works.

“ A Subcontractor” is a person or corporate body who has a Contract with the Contractor to carry out a part of the Work in the Contract, which includes Work on the Site.

“Temporary works” are works designed, constructed, installed, and removed by the Contractor which are needed for construction or installation of the Works.

“ A Variation” is an instruction given by the Employer’s Representative which varies the Works.

“The Works” are what the Contract requires the Contractor to construct, install, and turnover to the Employer.

2. Contract Documents

2.1 The following documents shall constitute the Contract documents and shall be interpreted in the following order of priority;

(1) Agreement,
(2) Letter of Acceptance,
(3) Contractor’s Tender,
(4) Conditions of Contract,
(5) Specifications,
(6) Drawings,
(7) Bills of Quantities

3. Employer's Representative's Decisions

3.1 Except where otherwise specifically stated, the Employer's Representative will decide contractual matters between the Employer and the Contractor in the role representing the Employer.

4. Works, Language and Law of Contract

4.1 The Contractor shall construct and install the Works in accordance with the Contract documents. The Works may commence on the Start Date and shall be carried out in accordance with the Program submitted by the Contractor, as updated with the approval of the Employer's Representative, and complete them by the Intended Completion Date.

4.2 The ruling language of the Contract shall be English language and the law governing the Contract shall be the law of the Republic of Kenya.

5. Safety, Temporary works and Discoveries

5.1 The Contractor shall be responsible for design of temporary works and shall obtain approval of third parties to the design of the temporary works where required.

5.2 The Contractor shall be responsible for the safety of all activities on the Site.

5.3 Any thing of historical or other interest or significant value unexpectedly discovered on the Site shall be the property of the Employer. The Contractor shall notify the Employer's Representative of such discoveries and carry out the Employer's Representative's instructions for dealing with them.

6 Work Program and Sub-contracting

6.1 Within seven days after Site possession date, the Contractor shall submit to the Employer's Representative for approval a program showing the general methods, arrangements, order and timing for all the activities in the Works.

6.2 The Contractor may sub-contract the Works (but only to a maximum of 25 percent of the Contract Price) with the approval of the Employer's Representative. However, he shall not assign the Contract without the approval of the Employer in writing. Sub-contracting shall not alter the Contractor's obligations.

7 The site

7.1 The Employer shall give possession of all parts of the Site to the Contractor.

7.2 The Contractor shall allow the Employer's Representative and any other person authorized by the Employer's Representative ,access to the Site and to any place where work in connection with the Contract is being carried out or is intended to be carried out.

8 Instructions

8.1 The Contractor shall carry out all instructions of the Employer's Representative which are in accordance with the Contract.

9 Extension of Completion Date

9.1 The Employer's Representative shall extend the Completion Date if an occurrence arises which makes it impossible for completion to be achieved by the Intended Completion Date. The Employer's Representative shall decide whether and by how much to extend the Completion Date.

9.2 For the purposes of this clause, the following occurrences shall be valid for consideration;

Delay by :-(a) force
reason of any exceptionally
adverse weather conditions,
or

(b) reason of civil commotion, strike or lockout affecting any of the trades employed upon the Works or any of the trades engaged in the preparation, manufacture or transportation of any of the goods or materials required for the Works, or

(c) reason of the Employer's Representative's instructions issued under these Conditions, or

(d) reason of the contractor not having received in due time necessary instructions, drawings, details or levels from the Employer's Representative for which he specifically applied in writing on a date which having regard to the date for Completion stated in the appendix to these Conditions or to any extension of time then fixed under this clause was neither unreasonably distant from nor unreasonably close to the date on which it was necessary for him to receive the same, or

(e) delay on the part of artists, tradesmen or others engaged by the Employer in executing work not forming part of this Contract, or

(g) Reason of delay by statutory or other services providers or similar bodies engaged directly by the Employer, or

(h) Reason of opening up for inspection of any Work covered up or of the testing or any of the Work, materials or goods in accordance with these conditions unless the inspection or test showed that the Work, materials or goods were not in accordance with this Contract, or

(i) reason of delay in appointing a replacement Employer's Representative, or

(j) reason of delay caused by the late supply of goods or materials or in executing Work for which the Employer or his agents are contractually obliged to supply or to execute as the case may be, or

(k) delay in receiving possession of or access to the Site.

10 Management Meetings

10.1 A Contract management meeting shall be held regularly and attended by the Employer's Representative and the Contractor. Its business shall be to review the plans for the remaining Work. The Employer's Representative shall record the business of management meetings and provide copies of the record to those attending the meeting and the Employer. The responsibility of the parties for actions to be taken shall be decided by the Employer's Representative either at the management meeting or after the management meeting and stated in writing to all who attend the meeting.

10.2 Communication between parties shall be effective only when in writing.

11 Defects

11.1 The Employer's Representative shall inspect the Contractor's work and notify the Contractor of any defects that are found. Such inspection shall not affect the Contractor's responsibilities. The Employer's Representative may instruct the Contractor to search for a defect and to uncover and test any Work that the Employer's Representative considers may have a defect. Should the defect be found, the cost of uncovering and making good shall be borne by the Contractor. However if there is no defect found, the cost of uncovering and making good shall be treated as a variation and added to the Contract Price.

11.2 The Employer's Representative shall give notice to the Contractor of any defects before the end of the Defects Liability Period, which begins at Completion, and is defined in the Appendix to Form of Tender

.

11.3 Every time notice of a defect is given, the Contractor shall correct the notified defect within the length of time specified by the Employer's Representative's notice. If the Contractor has not corrected a defect within the time specified in the Employer's Representative's notice, the Employer's Representative will assess the cost of having the defect corrected by other parties and such cost shall be treated as a variation and be deducted from the Contract Price.

12 Bills of Quantities

12.1 The Bills of Quantities shall contain items for the construction, installation, testing and commissioning of the Work to be done by the Contractor. The Contractor will be paid for the quantity of the Work done at the rates in the Bills of Quantities for each item. Items against which no rate is entered by the Tenderer will not be paid for when executed and shall be deemed covered by the rates for other items in the Bills of Quantities.

12.2 Where Bills of Quantities do not form part of the Contract, the Contract Price shall be a lump sum (which shall be deemed to have been based on the rates in the Schedule of Rates forming part of the tender) and shall be subject to re-measurement after each stage.

13 Variations

13.1 The Contractor shall provide the Employer's Representative with a quotation for carrying out the variations when requested to do so. The Employer's Representative shall assess the quotation and shall obtain the necessary authority from the Employer before the variation is ordered.

13.2 If the Work in the variation corresponds with an item description in the Bill of Quantities, the rate in the Bill of Quantities shall be used to calculate the value of the variation. If the nature of the Work in the variation does not correspond with items in the Bill of Quantities, the quotation by the Contractor shall be in the form of new rates for the relevant items of Work.

13.3 If the Contractor's quotation is unreasonable, the Employer's Representative may order the variation and make a change to the Contract Price, which shall be based on the Employer's Representative's own forecast of the effects of the variation on the Contractor's costs.

14 Payment Certificates and Final Account

14.1 The Contractor shall be paid after each of the following stages of Work listed here below (subject to re-measurement by the Employer's Representative of the Work done in each stage before payment is made). In case of lump-sum Contracts, the valuation for each stage shall be based on the quantities so obtained in the re-measurement and the rates in the Bill of Quantities and the final payment will be made after defects liability period.

14.2 Upon deciding that Works included in a particular stage are complete, the Contractor shall submit to the Employer's Representative his application for payment. The Employer's Representative shall check, adjust if necessary and certify the amount to be paid to the Contractor within 21 days of receipt of the Contractor's application .The Employer shall pay the Contractor the amounts so certified within 30 days of the date of issue of each Interim Certificate.

14.3 The Contractor shall supply the Employer's Representative with a detailed final account of the total amount that the Contractor considers payable under the Contract before the end of the Defects Liability Period. The Employer's Representative shall issue a Defect Liability Certificate and certify any final payment that is due to the Contractor within 30 days of receiving the Contractor's account if it is correct and complete. If it is not, the Employer's Representative shall issue within 21 days a schedule that states the scope of the corrections or additions that are necessary. If the final account is still unsatisfactory after it has been resubmitted, the Employer's Representative shall decide on the amount payable to the Contractor and issue a Final Payment Certificate. The Employer shall pay the Contractor the amount so certified within 60 days of the issue of the Final Payment Certificate.

14.4 If the period laid down for payment to the Contractor upon each of the Employer's Representative's Certificate by the Employer has been exceeded, the Contractor shall be entitled to claim simple interest calculated pro-rata on the basis of the number of days delayed at the Central Bank of Kenya's average base lending rate prevailing on the first day the payment becomes overdue. The Contractor will be required to notify the Employer within 15 days of receipt of delayed payments of his intentions to claim interest.

15. Insurance

15.1 The Contractor shall be responsible for and shall take out appropriate cover against, among other risks, personal injury; loss of or damage to the Works, materials and plant; and loss of or damage to property.

16. Liquidated Damages

16.1 The Contractor shall pay liquidated damages to the Employer at the rate 0.001 per cent of the Contract price per day for each day after the actual Completion Date is later than the Intended Completion Date except in the case of any of the occurrences listed under clause 9.2. The Employer may deduct liquidated damages from payments due to the Contractor. Payment of liquidated damages shall not affect the Contractor's liabilities.

17. Completion and Taking Over

17.1 Upon deciding that the Work is complete the Contractor shall request the Employer's Representative to issue a Certificate of Completion of the Works, upon deciding that the Work is completed.

The Employer shall take over the Site and the Works within seven days of the Employer's Representative issuing a Certificate of Completion.

18. Termination

18.1 The Employer or the Contractor may terminate the Contract if the other party causes a fundamental breach of the Contract. These fundamental breaches of Contract shall include, but shall not be limited to, the following;

(a) the Contractor stops Work for 30 days continuously without reasonable cause or authority from the Employer's Representative;

(b) the Contractor is declared bankrupt or goes into liquidation other than for a reconstruction or amalgamation;

(c) a payment certified by the Employer's Representative is not paid by the Employer to the Contractor within 30 days after the expiry of the payment periods stated in sub clauses 14.2 and 14.3 hereinabove.

(d) The Employer's Representative gives notice that failure to correct a particular defect is a fundamental breach of Contract and the Contractor fails to correct it within a reasonable period of time.

18.2 If the Contract is terminated, the Contractor shall stop Work immediately, and leave the Site as soon as reasonably possible. The Employer's Representative shall immediately thereafter arrange for a meeting for the purpose of taking record of the Works executed and materials, goods, equipment and temporary buildings on Site.

19. Payment Upon Termination

19.1 The Employer may employ and pay other persons to carry out and complete the Works and to rectify any defects and may enter upon the Works and use all materials on Site, plant, equipment and temporary works.

19.2 The Contractor shall, during the execution or after the completion of the Works under this clause, remove from the Site as and when required within such reasonable time as the Employer's Representative may in writing specify, any temporary buildings, plant, machinery, appliances, goods or materials belonging to him, and in default thereof , the Employer may (without being responsible for any loss or damage) remove and sell any such property of the Contractor, holding the proceeds less all costs incurred to the credit of the Contractor.

19.3 Until after completion of the Works under this clause, the Employer shall not be bound by any other provision of this Contract to make any payment to the Contractor, but upon such completion as aforesaid and the verification within a reasonable time of the accounts therefor the Employer's Representative shall certify the amount of expenses properly incurred by the Employer and, if such amount added to the money paid to the Contractor before such determination exceeds the total amount which would have been payable on due completion in accordance with this Contract, the difference shall be a debt payable to the Employer by the Contractor; and if the said amount added to the said money be less than the said total amount, the difference shall be a debt payable by the Employer to the Contractor.

20. Corrupt Gifts and Payments of Commission

20.1 The Contractor shall not;

(a) Offer or give or agree to give to any person in the service of the Employer any gifts or consideration of any kind as an inducement or reward for doing or forbearing to do or for having done or forborne to do any act in relation to the obtaining or execution of this or any other contract with the Employer or for showing or forbearing to show favour or disfavour to any person in relation to this or any other contract with the Employer.

(b) Any breach of this Condition by the Contractor or by anyone employed by him or acting on his behalf (whether with or without the knowledge of the Contractor) shall be an offence under the Laws of Kenya.

21. Settlement of Disputes

21.1 Any dispute arising out of the Contract which cannot be amicably settled between the parties shall be referred by either party to the arbitration and final decision of a person to be agreed between the parties. Failing agreement to concur in the appointment of an Arbitrator, the Arbitrator shall be appointed by the chairman of the Chartered Institute of Arbitrators, Kenya branch, on the request of the applying party.

SECTION V: APPENDIX TO FORM OF TENDER

This Appendix to Form of tender forms part of the Agreement.

Item	**Data**
Contract period	6 Months,
Priority of Documents	The documents forming the Contract shall be interpreted in the following order of priority: • the Contract Agreement and Appendix to form of agreement • the Letter of Acceptance • the Form of Tender • the Conditions of Contract, Part II - Conditions of Particular Application • the Conditions of Contract, Part I - General Conditions of Contract • the Specifications • the Drawings, • the Priced Bill of Quantities
Law of Contract	Laws of the Republic of Kenya
Language	English
Provision of Site	On Commencement Date
Name and Address of Employer	**County Government of Meru** **Meru**
Authorised Person	**Chief officer** **Roads, Transport and Energy (Meru)**
Name and Address of the Engineer	**Sub county Engineer** **(MERU REGION)**

Item	Data
Name and Address of Engineer's Representative	Inspector Roads (Meru)
Performance Security Amount Form	(Refer to guideline Notes) 10% contract sum Bank Guarantee
Requirements of Contractors Design	Not applicable
Programme ⇨ Time of Submission	Within 7 days of Commencement Date
⇨ Form of Programme ⇨ Interval Updates	Bar Chart As requested by the PM
Liquidated Damages Amount payable due to failure to complete	0.01% of Contract Price per Day to a limit of 1% of Contract Price.
Defects Liability period	6 months
Percentage of Retention	10% of Interim Payment
Limit of Retention Money	5% of Contract Price
Valuation of Works	Remeasurements with Bills of Quantities
Minimum Amount of Interim Payment	50 % of the contract sum
Currency of Payment	Kenya Shillings
Rate of Interest	Simple Interest at a rate of 2% above mean Base Lending Rate as issued by the Central Bank of Kenya.
Insurance	Required/ Not required
Insurance ⇨ The Works, materials plants & fees- Contractor's All risks ⇨ Workers compensation (WIBA-workers injury benefits policy)	Amount of Cover The Contract Price stated in the Agreement +15%+replacement cost of equipment on site. As per work injury benefits act 2007 laws of Kenya

SECTION VI: STANDARD FORMS

Table of Contents

CONTENTS: **PAGE**

FORM OF INVITATION FOR TENDERS **30**
FORM OF TENDER **31**
LETTER OF AWARD **32**
FORM OF TENDER SECURITY ..... ERROR! BOOKMARK NOT DEFINED.
PERFORMANCE BANK GUARANTEE **33**
BANK GUARANTEE FOR ADVANCE PAYMENT **35**
QUALIFICATION INFORMATION **38**
CONFIDENTIAL BUSINESS QUESTIONNAIRE **39**
SCHEDULE OF LABOUR: - BASIC RATES **41**
CERTIFICATE OF TENDERER'S VISIT TO SITE **42**
FORM OF WRITTEN POWER-OF-ATTORNEY **43**
KEY PERSONNEL **44**
SCHEDULE OF THE PROPOSED APPROPRIATE EQUIPMENT. **45**
SCHEDULE OF COMPLETED CIVIL WORKS CARRIED OUT IN THE PREVIOUS YEARS
SCHEDULE OF ONGOING PROJECTS **47**
OTHER SUPPLEMENTARY INFORMATION **48**
ADJUDICATOR'S AGREEMENT **49**
FRAUD & CORRUPTION **51**
ENVIRONMENTAL AND SOCIAL COMMITMENT **52**
PUBLIC PROCUREMENT ADMINISTRATIVE REVIEW BOARD **53**
DECLARATION FORM **54**

FORM OF INVITATION FOR TENDERS

_____[Date]

To: _____ [Name of Contractor]
_____[Address]
_____
_____

Dear Sirs:

Reference:_____[Contract Name]

You are qualified to tender for the above Contract.

We hereby invite you and other qualified Tenderers to submit a Tender for the execution and completion of the Works.

A complete set of Tender documents may be purchased from ____
_____
[Mailing address, cable/telex/facsimile numbers].

Upon payment of a non-refundable fee of Kshs_____

All Tenders shall be accompanied by .....number of copies of the same and a Tender Security in the form and amount of Kshs…… and shall be delivered to:
_____
[Address and location]

at or before _____(time and date). Tenders will be opened immediately thereafter, in the presence of those Tenderers' representatives who choose to attend.

Please confirm receipt of this letter and your intention to Tender in writing.

Yours faithfully,

_____ Authorised Signature

_____ Name and Title

FORM OF TENDER

TO: _____[Name of Employer) _____[Date]

_____[Name of Contract]

Dear Sir,

1. In accordance with the Conditions of Contract, Specifications, Drawings and Bills of Quantities for the execution of the above Works, We, the undersigned offer to construct, install and complete such Works and remedy any defects therein for the sum of Kshs._____[Amount in figures]Kenya Shillings_____ _____[Amount in words]

2. We undertake, if our Tender is accepted, to commence the Works on the commencement date and to complete the whole of the Works comprised in the Contract within the time stated in the Appendix.

3. We agree to abide by this Tender until _____[Insert date], and it shall remain binding upon us and may be accepted at any time before that date.
4. Unless and until a formal Agreement is prepared and executed this Tender together with your written acceptance thereof, shall constitute a binding Contract between us.

4. We understand that you are not bound to accept the lowest or any Tender you may receive.

Dated this _____ day of _____20_____

Signature _____in the capacity of_____

duly authorized to sign Tenders for and on behalf of _____[Name of Tenderer] of

_____[Address of Tenderer]

Witness: Name_____

Address_____

Signature_____

Date_____

LETTER OF AWARD

[Letterhead paper of the Employer]

_____[Date]

To: _____
[Name of the Contractor]

_____
[Address of the Contractor]

Dear Sir,

This is to notify you that your Tender dated _____

for the execution of _____

[name of the Contract and identification number,as given in the Tender documents] for the Contract Price of Kshs. _____ [amount in figures][Kenya Shillings_____(amount in words)] in accordance with the Instructions to Tenderers is hereby accepted.

You are hereby instructed to proceed with the execution of the said Works in accordance with the Contract documents.

Authorized Signature ……

Name and Title of Signatory ……

Attachment :

Tender-Securing Declaration Form (FOR SPECIAL GROUPS)

[The Bidder shall complete in this Form in accordance with the instructions indicated]

Date: [insert date (as day……., month and…….2018) of Bid Submission]

Tender No.[……]

To: [……insert complete name of Employer]

We, the undersigned, declare that:

- We understand that, according to your conditions, bids must be supported by a Bid-Securing Declaration.
- We accept that we will automatically be suspended from being eligible for bidding in any contract with the Purchaser for the period of time of [insert number of months or years]starting on [insert date],if we are in breach of our obligation(s) under the bid conditions, because we –
  - (a) Have withdrawn our Bid during the period of bid validity specified by us in the Bidding Data Sheet; or
  - (b) Having been notified of the acceptance of our Bid by the Purchaser during the period of bid validity,

    (I) fail or refuse to execute the Contract, if required, or

    (ii) Fail or refuse to furnish the Performance Security, in accordance with the ITT.
- We understand that this Bid Securing Declaration shall expire if we are not the successful Bidder, upon the earlier of

  (I) our receipt of a copy of your notification of the name of the successful Bidder; or

  (Ii) twenty-eight days after the expiration of our Tender.
- We understand that if we are a Joint Venture, the Bid Securing Declaration must be in the name of the Joint Venture that submits the bi, and the Joint Venture has not been legally constituted at the time of bidding, the Bid Securing Declaration shall be in the names of all future partners as named in the letter of intent.

Signed: [……insert signature of person whose name and capacity are shown] in the capacity of […….insert legal capacity of person signing the Bid Securing Declaration]

Name: […….insert complete name of person signing the Bid Securing Declaration]

Duly authorized to sign the bid for and on behalf of: [insert complete name of Bidder]

Dated on ..... day of .....,..... [Insert date of signing]

PERFORMANCE BANK GUARANTEE

To: _____(Name of Employer) _____(Date)

_____(Address of Employer)

Dear Sir,

WHEREAS _____(hereinafter called "the Contractor") has undertaken, in pursuance of Contract No. _____ dated _____ to execute _____ (hereinafter called "the Works");

AND WHEREAS it has been stipulated by you in the said Contract that the Contractor shall furnish you with a Bank Guarantee by a recognised bank for the sum specified therein as security for compliance with his obligations in accordance with the Contract;

AND WHEREAS we have agreed to give the Contractor such a Bank Guarantee:

NOW THEREFORE we hereby affirm that we are the Guarantor and responsible to you, on behalf of the Contractor, up to a total of Kshs. _____ (amount of Guarantee in figures) Kenya Shillings_____ (amount of Guarantee in words), and we undertake to pay you, upon your first written demand and without cavil or argument, any sum or sums within the limits of Kenya Shillings _____ (amount of Guarantee in words) as aforesaid without your needing to prove or to show grounds or reasons for your demand for the sum specified therein.

We hereby waive the necessity of your demanding the said debt from the Contractor before presenting us with the demand.

We further agree that no change, addition or other modification of the terms of the Contract or of the Works to be performed thereunder or of any of the Contract documents which may be made between you and the Contractor shall in any way release us from any liability under this Guarantee, and we hereby waive notice of any change, addition, or modification.

This Guarantee shall be valid until the date of issue of the Employer's notice under Sub-Clause 8.2 (Taking-Over Notice), of the Conditions of Contract.

SIGNATURE AND SEAL OF THE GUARANTOR _____

Name of Bank _____

Address _____

Date _____

BANK GUARANTEE FOR ADVANCE PAYMENT

To: _____ [Name of Employer] _____(Date)

_____[Address of Employer]

Gentlemen,

Ref: _____[name of Contract]

In accordance with the provisions of the Conditions of Contract of the above-mentioned Contract, **We,**_____[name and Address of Contractor] (hereinafter called "the Contractor") shall furnish you with a Bank guarantee by a recognised Bank for the sum specified therein as a security for compliance with his obligations in accordance with the Contract in an amount of Kshs._____[amount of Guarantee in figurers] Kenya Shillings_____[amount of Guarantee in words].

We, the _____[bank or financial institution], as instructed by the Contractor, agree unconditionally and irrevocably to guarantee as primary obligator and not as Surety merely, the payment to _____[name of Employer] on his first demand without whatsoever right of objection on our part and without his first claim to the Contractor, in the amount not exceeding Kshs_____[amount of Guarantee in figures]Kenya Shillings _____[amount of Guarantee in words].

We further agree that no change or addition to or other modification of the terms of the Contract or of the Works to be performed thereunder or of any of the Contract documents which may be made between _____[name of Employer] and the Contractor, shall in any way release us from any liability under this Guarantee, and we hereby waive notice of any such change, addition or modification.

This Guarantee shall remain valid and in full effect from the date of the Advance Payment under the Contract until _____(name of Employer) receives full payment of the same amount from the Contract.

Yours faithfully,
Signature and Seal _____

Name of the Bank or financial institution _____
Address _____

Date _____

Witness: Name: _____

Address: _____

Signature: _____

Date: _____

FORM OF AGREEMENT

THIS AGREEMENT is made on the ……day of ….. 2018 between the **County Government of Meru, of P.O. BOX 120 -60200, Meru, Kenya** hereinafter called the "**Employer** "of the one part and ----------hereinafter called the "**Contractor**" of the other part.

WHEREAS the Employer is desirous that certain works should be executed, viz: ----------

And has accepted a Bid by the Contractor to execute, complete and maintain such works **NOW THIS AGREEMENT WITNESSETH as follows:**

In this agreement words and expressions shall have the same meanings as are respectively assigned to them in the Conditions of Contract hereinafter referred to.

The following documents shall be deemed to form and be read and construed as part of this Agreement, viz.:

The said BID dated ----------

- Conditions of Contract; Parts I and II
- The Standard and Special Specifications;
- Priced Bill of Quantities;
- Letter of Acceptance;
- Form of Tender
- Drawings;
- Appendix to the Form of Agreement
- Schedule Of Supplementary Information
- Other Documents/Materials/Conditions agreed and documented.

All aforesaid documents are hereinafter referred to as "**The Contract**".
In consideration of the payment to be made by the **Employer** to the **Contractor**, the Contractor covenants with the Employer to execute and complete the Works in conformity with the provisions of the Contract.

The Employer hereby covenants to pay the Contractor in consideration of the execution, completion and maintenance of the Works at the Contract Price or such other sum as may become payable under the Contract at the times and in the manner prescribed by the Contract.

IN WITNESS WHEREOF the parties hereto have caused their respective common seals to be hereto affixed (or have hereunto set their respective hands and seals) on the day and year first above written.

SIGNED AND DELIVERED
By the said **Employer***:*…….....……..

Signature: …….....

Designation

(Chief Officer, Roads, Transport and Energy)
(For and on behalf of the said Employer.)

In the presence of:…….....

Signature……

By the said **Contractor:**
…….....……....

Signature……
Designation:……
(For and on behalf of the said Contractor)

In the presence of : .....

Signature:……
Address:……..

QUALIFICATION INFORMATION

TENDER QUESTIONNAIRE

Please fill in block letters.

1. Full name of Tenderer;

   ……

2. Full address of Tenderer to which Tender correspondence is to be sent (unless an agent has been appointed below);

   ……

3. Telephone number (s) of Tenderer;

   ……

4. Facsimile of Tenderer;
   ……

5. Name of Tenderer's representative to be contacted on matters of the Tender during the Tender period;
   ……

6. Details of Tenderer's nominated agent (if any) to receive Tender notices (name, address, telephone, telefax);

   ……

   ……

_____
Signature of Tenderer

Make copy and deliver to:_____(Name of Employer) (The Tenderer shall leave one copy at the time of purchase of the Tender documents)

CONFIDENTIAL BUSINESS QUESTIONNAIRE

You are requested to give the particulars indicated in Part 1 and either Part 2 (a) or 2 (b) whichever applies to your type of business.

You are advised that it is a serious offence to give false information on this Form.

Part 1 – General

Business Name ……

Location of business premises; Country/Town…….

Plot No…… Street/Road ……

Postal Address…… Tel No……..

Nature of Business……..…..

Current Trade Licensee No…… Expiring date…….……

Maximum value of business which you can handle at any time: Kshs ……

Name of your Bankers……..…

Branch…….…

Part 2 (b) – Partnership

Give details of partners as follows:

Name in full Nationality Citizenship Details Shares

1……

2……

3……

Part 2(c) – Registered Company:

Private or public…….....…

State the nominal and issued capital of the Company-

Nominal Kshs…….....……

Issued Kshs…….....…

Give details of all directors as follows:

Name in full . Nationality. Citizenship Details*. Shares.

1……..…....…

2……..…....…

3…….....…

4…….....…

Part 2(d) – Interest in the Firm:

Is there any person / persons in …… …… (Name of Employer) who

has interest in this firm? Yes/No…… (Delete as necessary)

I certify that the information given above is correct.

…… …… …….....…

(Title) (Signature) (Date)

* Attach proof of citizenship

SCHEDULE OF LABOUR: - BASIC RATES

(Reference: Clause 4 of Conditions of Particular Application)

LABOUR CATEGORY	UNIT (MONTH/SHIFT/HOUR)	RATES

Categories to be generally in accordance with those used by the Kenya Building Construction and Engineering and Allied Trades Workers' Union.

I certify that the above information is correct.

…… …… ……

(Title) *(Signature)* *(Date)*

CERTIFICATE OF TENDERER'S VISIT TO SITE

This is to certify that

[Name/s]……..

……..

Being the authorized representative/Agent of [Name of Tenderer]
……

……

participated in the organized inspection visit of the site of the works for the **(**participated in the organised inspection visit of the site of the work **.**

held on …… day of……20……

Signed……..
(Employer's Representative)

……..

NOTE: This form is to be completed when the site visit is made

FORM OF WRITTEN POWER-OF-ATTORNEY

The Tenderer consisting of a joint venture shall state here below the name and address of his representative who is authorized to receive on his behalf correspondence in connection with the Tender.

……

(Name of Tenderer's Representative in block letters)

……

(Address of Tenderer's Representative)

……

(Signature of Tenderer's Representative)

KEY PERSONNEL

DESIGNATION	NAME	NATIONALITY	SUMMARY OF QUALIFICATIONS AND EXPERIENCE
Headquarters: 1. Managing Director 2. 3. 4. 5. etc.			
Site Office: 1. Site Supervisor 2. 3. 4. 5. 6			

I certify that the above information is correct.

……	……	……..
(Title)	(Signature)	(Date)

SCHEDULE OF THE PROPOSED APPROPRIATE EQUIPMENT.

Mandatory minimum number of equipment required by the Employer for the execution of the project that the bidder must make available for the Contract

Item No.	Equipment Details	Minimum Number Required	No of Equipment Owned by the Bidder	No. of equipment to be hired
1	Grader	1		
2	Tippers payload 10 – 20 tonnes	2		
3	Water tankers (10,000 litres capacity)	1		
4	Concrete mixer	1		
5	Shovel	1		
6	Drum roller	1		

The Bidder must attach certified copies of log books or lease agreement of the following

I certify that the above information is correct.

…… (Title) …… (Signature) …….. (Date)

SCHEDULE OF COMPLETED CIVIL WORKS CARRIED OUT IN THE PREVIOUS YEARS

DESCRIPTION OF WORKS AND CLIENT	TOTAL VALUE OF WORKS (KSHS)	CONTRACT PERIOD (YEARS)	YEAR COMPLETED

I certify that the above Civil Works were successfully carried out and completed by ourselves.

…… …… ……
(Title) (Signature) (Date)

SCHEDULE OF ONGOING PROJECTS

DESCRIPTION OF WORK AND CLIENT	CONTRACT PERIOD	DATE OF COMMEN-CEMENT	DATE OF COMPLETION	TOTAL VALUE OF WORKS (KSHS.)	% COMPLETE D TODATE

I certify that the above Civil Works are being carried out by ourselves and that the above information is correct.

…… (Title)

…… (Signature)

…… (Date)

OTHER SUPPLEMENTARY INFORMATION

1. Financial reports for the last three years, balance sheets, profit and loss statements, auditors' reports etc. List them below and attach copies.

……
……
……

2. Evidence of access to financial resources to meet the qualification requirements. Cash in hand, lines of credit etc. List below and attach copies of supporting documents

……
……
……

3. Name, address , telephone, telex, fax numbers of the Tenderer's Bankers who may provide reference if contacted by the Employer.

……
……
……

4. Information on current litigation in which the Tenderer is involved.

OTHER PARTY (IES)	CAUSE OF DISPUTE	AMOUNT INVOLVED (KSHS)

I certify that the above information is correct.

…… …… ……
Title Signature Date

ADJUDICATOR'S AGREEMENT

Identification of Project:

……
(the "Project")

Name and address of the Employer:

……..
(the "Employer")

Name and address of the Contractor:

……..
(the "Contractor")

Name and address of the Adjudicator:

……..
(the "Adjudicator")

Whereas the Employer and the Contractor have entered into a Contract ("the Contract") for the execution of the Project and wish to appoint the Adjudicator to act as adjudicator in accordance with the Rules for Adjudication ["the Rules"].

The Employer, Contractor and Adjudicator agree as follows:

1. The Rules and dispute provisions of the Contract shall form part of this Agreement.

2. The Adjudicator shall be paid:

   A retainer fee of ……..…….. per calendar month(where applicable)

   A daily fee of ……..…

   Expenses (including the cost of telephone calls, courier charges, faxes and telexes incurred in connection with his duties; all reasonable and necessary travel expenses, hotel accommodation and subsistence and other direct travel expenses).

   Receipts will be required for all expenses.

3. The Adjudicator agrees to act as Adjudicator in accordance with the Rules and has disclosed to the Parties any previous or existing relationship with the Parties or others concerned with the Project.

4. This Agreement shall be governed by the laws of……

5. The Language of this Agreement shall be ……..

SIGNED BY ……

For and on behalf of the Employer in the presence of

Witness ……...
Name ……...
Address ……...
Date ……...

SIGNED BY ……

For and on behalf of the Contractor in the presence of

Witness ……...
Name ……...
Address ……...
Date ……...

SIGNED BY ……

For and on behalf of the Adjudicator in the presence of

Witness ……...
Name ……...
Address ……...
Date ……...

FRAUD & CORRUPTION

1 If the Employer determines that the Contractor has engaged in corrupt, fraudulent, collusive, coercive or obstructive practices, in competing for or in executing the Contract, then the Employer may, after giving 14 days notice to the Contractor, terminate the Contractor's employment under the Contract and expel him from the Site.

2 Should any employee of the Contractor be determined to have engaged in corrupt, fraudulent, collusive, coercive, or obstructive practice during the execution of the Works, then that employee shall be removed.

3 For the purposes of this Sub-Clause:

(i) "corrupt practice" is the offering, giving, receiving or soliciting, directly or indirectly, of anything of value to influence improperly the actions of another party;

(ii) "fraudulent practice" is any act or omission, including a misrepresentation, that knowingly or recklessly misleads, or attempts to mislead, a party to obtain a financial or other benefit or to avoid an obligation;

(iii) "collusive practice" is an arrangement between two or more parties designed to achieve an improper purpose, including to influence improperly the actions of another party;

(iv) "Coercive practice" is impairing or harming, or threatening to impair or harm, directly or indirectly, any party or the property of the party to influence improperly the actions of a party.

4 The Contractor declares that:

a) They did not engage in any action to influence the Project implementation process to the detriment of the Employer, in particular no collusive practice took place nor will take place, and

The bidding proceedings, contract award, and execution have not and will not be subject to any corrupt practice as defined in the United Nations Convention to combat corruption dated 31 October 2003.

Dated this _____ day of _____20_____

Signature _____in the capacity of_____

duly authorized to sign Tenders for and on behalf of
_____[Name of Tenderer] of

_____[Address of Tenderer]

_____[Seal or Stamp of Tenderer]

ENVIRONMENTAL AND SOCIAL COMMITMENT

I have taken due note of the importance to comply with environmental and social standards and regulations.

I, the undersigned, [……] acting as the duly authorized representative of […….],

With respect to the submission of a bid for [……] in accordance with the invitation to tender No [……], I undertake to comply, and ensure that our subcontractors, if any, comply with international environmental and labour standards consistent with applicable law and regulations in the country of implementation of the Project, including the fundamental conventions of the International Labour Organisation (ILO) and international environmental treaties

In addition, I also undertake to adopt any environmental and social risk mitigation measures as defined in the environmental and social management plan or the notice of environmental and social impact issued by the Employer.

Dated this _____ day of _____20_____

Signature _____in the capacity of_____

duly authorized to sign Tenders for and on behalf of
_____[Name of Tenderer] of

_____[Address of Tenderer]

_____[Seal or Stamp of Tenderer]

FORM RB 1

REPUBLIC OF KENYA

PUBLIC PROCUREMENT ADMINISTRATIVE REVIEW BOARD

APPLICATION NO…….OF……..…20……...

BETWEEN

…….APPLICANT

AND

……RESPONDENT (Procuring Entity)

Request for review of the decision of the…… (Name of the Procuring Entity) of ……dated the…day of …….20…….in the matter of Tender No……..…of ……..20…

REQUEST FOR REVIEW

I/We……,the above named Applicant(s), of address: Physical address…….Fax No……Tel. No……..Email ……, hereby request the Public Procurement Administrative Review Board to review the whole/part of the above mentioned decision on the following grounds , namely:-

1.
2.
etc.

By this memorandum, the Applicant requests the Board for an order/orders that: -

1.
2.
etc

SIGNED …….(Applicant)

Dated on…….day of ……./…20…

FOR OFFICIAL USE ONLY

Lodged with the Secretary Public Procurement Administrative Review Board on …… day of ……....20……

SIGNED
Board Secretary

DECLARATION FORM

Date _____

To _____

_____

_____

The tenderer i.e. (Name and address)_____

_____declare the following:

a) Has not been debarred from participating in public procurement.

b) Has not been involved in and will not be involved in corrupt and fraudulent practices regarding public procurement.

_____	_____	_____
Title	Signature	Date

(To be signed by authorized representative and officially stamped)

Supervision Check List (1/2)

Project Title:	
Contractor:	

1. This check list is for Resident Engineer to check contractor's work execution process.
2. Fill in date of checking as (day/month), mark as indicated in Filling Example, and state remarks.
3. Put this check list in the Monthly Progress Report.

	Date	Name	Signature
The Engineer's Representative (Project Engineer)			
Resident Engineer			

Item		Check Point		before	During execution									after	Remarks
				Date /	Date /	Date /	Date /	Date /	Date /	Date /	Date /	Date /	Date /	Date /	Reason for unsatisfactory performance (Site diary No.) Corrective order by authority (Date) Excellent point to be specified
1	Execution system in general	1-1	Works Execution Programme (including its revised version if any) is submitted before the date specified in contract document	☐	☐	☐	☐	☐	☐	☐	☐	☐			
		1-2	Works Execution Programme properly reflects the given specifications and site conditions	☐	☐	☐	☐	☐	☐	☐	☐	☐			
		1-3	Execution procedures are in accordance with Works Execution Programme		☐	☐	☐	☐	☐	☐	☐	☐			
2	Equipment holding	2-1	All equipment used are properly mobilized in accordance with Works Execution Programme		☐	☐	☐	☐	☐	☐	☐	☐			
		2-2	All equipment used is well maintained during the execution of works		☐	☐	☐	☐	☐	☐	☐	☐			
3	Contractor's in-house staff	3-1	Qualified technical staff of contractor are properly assigned as specified in Works Execution Programme		☐	☐	☐	☐	☐	☐	☐	☐			
		3-2	Contractor's in-house key staff understand work process and schedule properly		☐	☐	☐	☐	☐	☐	☐	☐			
		3-3	Contractor's in-house staff give technical guidance and direction to workers and operators properly and timely		☐	☐	☐	☐	☐	☐	☐	☐			
		3-4	Communications with authority in writing is properly and timely		☐	☐	☐	☐	☐	☐	☐	☐			
4	Personnel employment	4-1	Workers and operators are deployed in accordance with Works Execution Programme		☐	☐	☐	☐	☐	☐	☐	☐			
		4-2	Wage payment is properly made on time		☐	☐	☐	☐	☐	☐	☐	☐			
5	Site base facilities	5-1	Office and stockyard are prepared in accordance with Works Execution Programme		☐	☐	☐	☐	☐	☐	☐	☐			
		5-2	Site is well maintained during the work execution and cleared on completion		☐	☐	☐	☐	☐	☐	☐	☐	☐		
		5-3	Material stored on site is properly managed during the work execution		☐	☐	☐	☐	☐	☐	☐	☐			
6	Quality and quantity management	6-1	Material testing, structural examination, and measurements are properly and routinely conducted based on specifications and Works Execution Programme		☐	☐	☐	☐	☐	☐	☐	☐			

Filling Example : ✓Check point is satisfactory ■ Check point is unsatisfactory N/A Not applicable

Supervision Check List (2/2)

Project Title:	
Contractor:	

	Signature
The Engineer's Representative (Project Engineer)	
Resident Engineer	

1. This check list is for Resident Engineer to check contractor's work execution process.
2. Fill in date of checking as (day/month), mark as indicated in Filling Example, and state remarks.
3. Put this check list in the Monthly Progress Report.

Item		Check Point		before	During execution								after	Remarks
				Date /	Date /	Date /	Date /	Date /	Date /	Date /	Date /	Date /	Date /	Reason for unsatisfactory performance (Site diary No.) Corrective order by authority (Date) Excellent point to be specified
6	Quality and quantity management	6-2	Results of material testing, structural examination and measurements are within the specifications.		☐	☐	☐	☐	☐	☐	☐	☐		
		6-3	Results of material testing, structural examination, and measurements are properly compiled as reports for confirmation		☐	☐	☐	☐	☐	☐	☐	☐		
7	Work scheduling	7-1	Understanding of critical path and its reflection on scheduling are proper		☐	☐	☐	☐	☐	☐	☐	☐		
		7-2	Actual proceedings are periodically compared to the planned schedule described in Works Execution Programme		☐	☐	☐	☐	☐	☐	☐	☐		
		7-3	Changes caused by site conditions are properly handled to keep Works on schedule		☐	☐	☐	☐	☐	☐	☐	☐		
		7-4	All works are completed within the contract term or within the extended term as allowed										☐	
8	Work safety management	8-1	No accident occurs to workers, operators, or third-parties.		☐	☐	☐	☐	☐	☐	☐	☐		
		8-2	Safety of workers and operators is considered		☐	☐	☐	☐	☐	☐	☐	☐		
		8-3	Accident prevention efforts for third-parties are proper		☐	☐	☐	☐	☐	☐	☐	☐		
		8-4	Traffic and site safety devices are properly installed and managed		☐	☐	☐	☐	☐	☐	☐	☐		
		8-5	Temporary facilities (e.g. scaffolding) are constantly checked		☐	☐	☐	☐	☐	☐	☐	☐		
9	Environmental and social management	9-1	Environmental and social mitigation efforts (e.g. against noise, vibration, emission, and dust) are conducted		☐	☐	☐	☐	☐	☐	☐	☐		
		9-2	Waste material from site is properly disposed		☐	☐	☐	☐	☐	☐	☐	☐		
		9-3	Damage to existing roads, works and services is avoided or are repaired when it occurs		☐	☐	☐	☐	☐	☐	☐	☐		
		9-4	Transportation by vehicles is properly done with no overloading, and neither material falling, leakage, nor spillage.		☐	☐	☐	☐	☐	☐	☐	☐		

Filling Example : ✓Check point is satisfactory ■ Check point is unsatisfactory N/A Not applicable

SECTION VIII: SPECIFICATIONS, DRAWINGS AND BILLS OF QUANTITIES

I. SPECIFICATIONS

1.0 PROJECT DESCRIPTION.

PROJECT LOCATION

Roads are located in Antubetwe Kiongo ward, Igembe North Sub County.

SCOPE OF WORKS

The works specified under the contract includes all general and auxiliary works and work of any nature that is deemed to be necessary for the due and satisfactory grading and gravelling works and within the road reserve.
The mandatory items of work included in the contract are

1. General: Office administration and Overheads/Preliminaries

2.Grading and gravelling works

1.0 PROJECT SPECIFICATIONS.

Contents:

SECTION 01: PRELIMINARY AND GENERAL ITEMS

10-60-001: General: Office administration and overheads/Preliminaries

SECTION 10: GRADING AND GRAVELLING WORKS

10-50-001: Heavy grading without watering and compaction
10-50-001: Provide gravel wearing course-excavation, free haul, spread, water and compact gravel to specifications

SECTION 01: PRELIMINARY AND GENERAL ITEMS

01-40-003 Insurance and Bonds

The Contractor shall provide Insurance and Sureties in accordance with relevant Clauses in the Conditions of Contract.

Measurement and Payment

Lump Sum payment for this item will be made upon the production of satisfactory evidence by the Contractor that Insurances and Securities have been effected.

01-40-004 Quality Control Tests

The Engineer may instruct the Contractor during the progress of the Works to carry out quality control tests to check materials and standards of workmanship, against the Specifications.

Where such tests indicate defective standards the Engineer shall instruct the Contractor to rectify the defects to the Engineer's satisfaction and at the Contractor's expense.

Measurement and Payment

The Engineer shall include a Provisional Sum for this item to be expended only as and when the Contractor is instructed to carry out tests.

SECTION 04: SITE CLEARANCE

Scope

This section covers the clearance of bushes, shrubs, grasses, trees, stumps, boulders, stripping and grubbing of the topsoil, removal of anthills and other unsuitable materials for the specified widths of the road, quarry and borrow areas. The distinction between light and heavy bush shall be decided by the Engineer.
The minimum site clearing widths for each of the activities shall be as shown in Table 4.1

Table 4.1: Site Clearing Widths

Road Category	*Running Surface*	*Stripping and Grubbing*	*Trees, Stumps, Boulders*	*Bush Clearing*
A/B/C + Secondary Roads	6.0 m	10.6 m	10.6 m	14.0 m

04-50- 003 Bush Clearing (Heavy)

Where the Engineer designates an area as Heavy Bush (based on the undergrowth density) the Contractor shall clear all vegetation including small trees, shrubs and undergrowth, and their root systems, and shall salvage any re-useable timber or other material by cutting into logs and stacking. Other cleared material shall be collected and disposed of off-site as directed by the Engineer.

Work Method

The Contractor shall use **Labour** methods for this item

Quality Control

The Engineer shall check the cleared widths at 50 metre intervals

Measurement Unit: m^2

The measurement shall be the area cleared to the specified width over the length as instructed by the Engineer.

Payment:

The unit rate shall be the full compensation for all labour, tools and incidental costs required to complete the work.

SECTION O5: EARTHWORKS

Scope

This section covers the excavation of soil and the placing, watering and compaction of hard and soft material to form the road formation.

05-40- 001: Re - Establishment of the Vertical Alignment

The Contractor shall re-establish the vertical alignment of the road section which includes the setting out excavation of horizontal slots marking the level road platform.

The width of the slots shall be 0.5 m and they shall be set out at 10m intervals along the straight section and 5m on the curve sections of the road. Each slot shall be compacted using hand rammers until no more imprints of the rammer on the surface of the slot can be seen. The length of each slot shall be equal to the formation width of the road.

Vertical alignment standards shall be those set out in Table 5.1

Table 5.1 Vertical Alignment Standards

Standard	Flat & Rolling Terrain	Hilly Terrain
Gradients		
Desirable Minimum	2%	2%
Desirable Maximum	8%	10%
Absolute Maximum	10%	12%

Work method

The Contractor shall apply **Labour** methods to carry out this item work.

Quality Control:

- The hand rammer shall be not less than 5kg
- The level of the slot shall have a tolerance of ± 50 mm
- The longitudinal profile of the road shall be checked at every third slot and shall have a maximum tolerance of ± 50mm

Measurement Unit: m

The measurement shall be linear metres of road alignment set out

Payment:

The unit rate shall be the full compensation for labour, tools, materials and incidental costs required for carrying out the work.

05-50- 007 Excavation to Level and Compaction

The Contractor shall cut material to form the level road platform and place the excavated material as fill or in spoil areas approved by the Engineer. Where material needs to be borrowed excavation shall only be from borrow areas approved by the Engineer.

The fill layers to be compacted shall not exceed 150mm loose depth.

Compaction of the fill material shall be carried out from the edges to the centre by overlapping passes of the compaction equipment. The number of passes shall be as directed by the Engineer dependent upon the equipment used and the material being compacted. Unless otherwise instructed the moisture content of the material shall be within ± 2% of optimum. Where additional moisture is required water shall be applied in an even manner such that no longitudinal or transverse flow occurs.

The Engineer may instruct the Contractor to carry out density tests on the compacted material to ensure that an acceptable standard has been achieved.

Work Method

The Contractor shall use **Labour** and appropriate compaction **Equipment** to carry out this item of work.

Quality Control

- The width of the platform shall be checked at intervals of 50 m and shall have a tolerance of + / - 50mm.
- The level platform shall be horizontal in the transverse direction and shall have a tolerance of + / - 15 mm under a 2 metre straight edge.
- The longitudinal profile shall have a maximum tolerance of + / - 50 mm over a 30m length of gradient.
- Compaction shall show no movement of material under the roller.
- Compaction test standard shall be 95% MDD (AASHTO T99)

Measurement Unit: m^3

The measurement shall be the volume of compacted fill material forming the level platform.

Payment

The unit rate shall be the full compensation for labour, tools, equipment, water and incidental costs required for carrying out the work.

05-50- 008 Spreading and Compaction for Camber Formation

The Contractor shall spread and compact the material deposited from the side drains to form the camber on the road, in accordance with the Drawings or as directed by the Engineer, and shall check the profile with the appropriate camber board.

Compaction shall be carried out from the edges to the centre line by overlapping passes of the compaction equipment. The number of passes shall be as directed by the Engineer dependent upon the equipment used and the material being compacted. Unless otherwise instructed the moisture content of the material shall be within + 2% of optimum. Where additional moisture is required water shall be applied in an even manner such that no longitudinal or transverse flow occurs.

The Engineer may instruct the Contractor to carry out density tests on the compacted material to ensure that an acceptable standard has been achieved.

Work method

The Contractor shall use Labour and appropriate compaction Equipment to carry out this item.

Quality Control

- The width of the carriageway including the shoulders shall be checked at 50m intervals and shall have a tolerance of +50/-20 mm.
- The camber shall be checked 50m intervals and shall have a tolerance of +/- 1%.
- Compaction shall show no movement of material under the roller
- Compaction test standard shall be 98% MDD (AASHTO T99)

Measurement Unit m2

The measurement shall be the area of camber formed, according to the specified carriageway width and measured length of road.

Payment

The unit rate shall be the full compensation for all labour, tools, equipment, water and incidental costs required for carrying out the work.

SECTION 07: EXCAVATION AND FILLING FOR STRUCTURES

Scope

This section covers all Works in connection with the excavation for concrete pipe culverts; inlet and outlet structures; drifts and drainage protection Works;

07-50- 002 Excavation for Drainage Structures

The Contractor shall excavate trenches for culverts; foundations for head walls, wing walls; inlet and outlet aprons and other drainage structures to the dimensions and levels shown on the Drawings or as directed by the Engineer. The excavations shall be kept free of water and shall be compacted with hand rammers of not less than 5kg.

The Engineer shall approve all excavations before the Contractor shall be permitted to proceed with the construction.

The Contractor shall take all necessary precautions to safeguard the stability and safety of the excavations.

Work Method

The Contractor shall apply **Labour** methods to carry out this item.

Quality Control

- The dimensions of the excavations shall have a tolerance of + / - 50mm
- The invert levels shall have a tolerance of + / - 50mm
- The trench bottom gradients shall have a tolerance of + / - 20mm over the length of the trench

Measurement Unit m^3

The measurement shall be volume of material excavated measured net according to the Drawings.

Payment

The unit rate shall be the full compensation for labour, tools, and any incidental costs required for carrying out the work.

07-50-003: Side-drain Excavation (Soft Material)

The Contractor shall excavate side drains to the profiles shown on the Drawings or as directed by the Engineer.

The material from the excavations shall be used for the formation of the camber. Where additional material is required to achieve the required camber, the widths of the side drains may be increased, with the approval of the Engineer.

Locations of the side drains shall be as shown on the Drawings or as directed by the Engineer, and the Contractor shall use the appropriate ditch template to control the excavations

Work method

The Contractor shall apply **Labour** methods to carry out this item

Quality Control

- The dimensions of the side drains shall be checked at 50m intervals and shall have a tolerance of ± 50mm
- The longitudinal profile of the side drains shall be checked at 30m intervals and shall have a tolerance of +/-50mm.

Measurement Unit m^3

Measurement shall be the volume of material excavated to form the side drains, and deposited for camber formation.

Payment

The unit rate shall be the full compensation for labour, tools and incidental costs required for carrying out the work.

07-50-004 Side-drain Excavation (Hard material)

Where, in the opinion of the Engineer, the material to be excavated to form the side drains may be classified as hard the Contractor shall carry out the excavation in accordance with 05-003 and shall be compensated under this item,

Work Method:

The Contractor shall apply **Labour** methods with appropriate **Equipment** to carry out this item.

Quality Control:

The Engineer shall measure the volume of the excavation classified as Hard material

Measurement Unit: m^3

The measurement shall be the volume of material excavated and deposited to form the camber

Payment:

The unit rate shall be the full compensation for all labour, tools, equipment and incidental costs required to complete the work.

07-50- 005 Mitre Drains/Catchwater Drains

i. Labour ii. Equipment

The Contractor shall excavate mitre drains and catchwater drains to the dimensions shown on the Drawings and at locations as directed by the Engineer. They shall be excavated in a manner to minimise erosion at the discharge point. The material excavated from the drains shall be used to form the side drain bund directing water to the mitre-drain, and a bund on the lower side of the cut-off drain, or disposed of as directed by the Engineer.

Work Method

The Contractor shall use either **Labour** or **Equipment** as directed by the Engineer to carry out this work.

Quality Control

- The longitudinal profile shall have a gradient of maximum 4%.
- The dimensions of the mitre drains shall have maximum tolerances of ±20mm
- The location of the mitre drains shall be approved by the Engineer.

Measurement Unit: m^3

The measurement shall be the volume of material excavated as measured on site in approved drains.

Payment

The unit rate shall be full compensation for labour, tools, equipment and incidental costs required for carrying out the work.

SECTION 08: CULVERT AND DRAINAGE WORKS

Scope

This section covers all Works in connection with the installation of concrete pipe culverts; inlet and outlet structures; drifts and drainage protection Works; and the construction of Scour Checks

08-60-001/005: Culvert Cleaning (partially blocked)

08-60-001	300mm	dia
08-60-002	450mm	dia
08-60-003	600mm	dia
08-60-004	900mm	dia
08-60-005	1200 mm	dia

This activity involves the cleaning of culverts of specified sizes including pipe barrels, the outlet/inlet structures, and the outlet drains, keeping them free of all debris, weed, silt and any obstruction to ensure free passage of water at all times. The debris shall be deposited in approved spoil dumps as directed by the Engineer

Partially blocked culverts shall be those with less than half of the barrel blocked.

Correct widths and slopes of the outlet drains shall be maintained. The gradient of the outlet drain shall be not less than 2 %.

All broken culvert barrels discovered in the course carrying out this activity shall be reported to the Engineer.

This activity shall be carried out before the rains, or as directed by the Engineer.

Work Method

The Contractor shall use **Labour** to carry out this item of work

Quality Control

The culverts shall be checked as free of debris to the satisfaction of the Engineer.

Measurement Unit: **m**

The measurement shall be the length of culvert, including the outlet drain, cleaned

Payment

The unit rate shall be full compensation for labour, tools and incidental costs required to carry out the work.

08- 60 - 006/7/8/9/10 : Culvert Cleaning (Fully blocked):

08 - 60 - 006 300mm dia;
08 - 60 - 007 450mm dia;
08 - 60 - 008 600mm dia;
08 - 60 - 009 900mm dia;
08 - 60 - 010 1200mm dia

This activity involves the cleaning of culverts of specified sizes including pipe barrels, the outlet/inlet structures, and the outlet drains, keeping them free of all debris, weed, silt and any obstruction to ensure free passage of water at all times. The debris shall be deposited in approved spoil dumps as directed by the Engineer

Fully blocked culvert shall be those with greater than half of the barrel blocked.

Correct widths and slopes of the outlet drains shall be maintained. The gradient of the outlet drain shall be not less than 2 %.

All broken culvert barrels discovered in the course of carrying out this activity shall be reported to the Engineer.

This activity should be carried out before the onset of the rains, or as directed by the Engineer.

Work Method
The Contractor shall use **Labour** to carry out this item of work.

Quality Control

The culverts shall be checked as free from debris, to the satisfaction of the Engineer.

Measurement Unit: m

The measurement shall be the length of culvert, including the outlet drain cleaned.

Payment

The unit rate shall be full compensation for labour, tools and incidental costs required to carry out the work.

08-60-016/035 Concrete Pipe Culverts

08-60-016	300	mm	haunched	(Type II)
08-60-017	300	mm	unhaunched	(Type 1)
08-60-018	450	mm	haunched	(Type II)
08-60-019	450	mm	unhaunched	(Type 1)
08-60-020	600	mm	haunched	(Type II)
08-60-021	600	mm	unhaunched	(Type I)
08-60-022	900	mm	haunched	(Type II)
08-60-023	900	mm	unhaunched	(Type I)
08-60-024	1200	mm	haunched	(Type II)
08-60-025	1200	mm	unhaunched	(Type I)
08-60-026	300	mm	semi-surround	(Type III)
08-60-027	300	mm	surround	(Type IV)
08-60-028	450	mm	semi-surround	(Type III)
08-60-029	450	mm	surround	(Type IV)
08-60-030	600	mm	semi-surround	(Type III)
08-60-031	600	mm	surround	(Type IV)
08-60-032	900	mm	semi-surround	(Type III)
08-60-033	900	mm	surround	(Type IV)
08-60-034	1200	mm	semi-surround	(Type III)
08-60-035	1200	mm	surround	(Type IV)

The Contractor shall supply, lay and joint concrete pipes to form culverts, including the concrete bedding; haunching or surrounds; and backfilling, in accordance with the Drawings for the Type and diameter specified in the Contract or directed by the Engineer.

The pipes shall be of Class 20/20 concrete, at least 28 days cured, and manufactured on site or procured from a supplier approved by the Engineer. The pipes shall be laid on a bedding of Class 15/20 concrete of dimensions as shown on the Drawings and jointed with cement mortar 1:4.

The culvert gradient including the outlet shall be a minimum 2%.

The pipes shall be haunched or surrounded, according to the Type specified, with Class 15/20 concrete to the dimensions shown on the Drawings or as directed by the Engineer.

Backfilling shall be carried with approved material and compacted in layers not exceeding

150 mm loose depth and placed evenly on each side of the pipe. Ramps shall be shaped to achieve a minimum overfill of 75% of the pipe diameter, and shall be tapered back on the carriageway to provide a gradual approach, as directed by the Engineer.

If the Contractor wishes to construct culverts in-site, using inflatable or collapsible forms the Engineer's approval shall first be sought for the proposed working method.

On completion the inside of the culvert shall be smooth, without displaced joints or other obstructions and true to line and level.

Work Method

The Contractor shall use **Labour** and appropriate **Equipment** to carry out this item work

Quality Control

- Concrete quality shall be checked for cracks, honey combing, and other defects.
- Before the pipes are laid, the gradient of the concrete bedding shall be checked and shall not be less than 2%
- The joints shall be checked to see that they have been properly made.

Measurement Unit: m

The measurement shall be in linear metres of the installed Type and size of culvert specified, measured net according to the Drawings.

Payment

The unit rate shall be the full compensation for labour, tools, materials, equipment and any other incidentals that may be required in carrying out the work.

08- 70- 001 Head Wall Repair - Masonry

This activity involves the repairs to damaged head walls and wing walls built in masonry.

Where directed by the Engineer, the masonry walls shall be inspected and loose or missing stone re-secured or replaced. Damaged pointing shall be repaired with cement mortar 1:4 and finished flush with the stonework.

Work Method

The Contractor shall use **Labour** to carry out this item of work

Quality Control

- The stability of the walls and the pointing shall be to the satisfaction of the Engineer.

Measurement Unit: No

The measurement shall be the number of walls repaired as directed by the Engineer.

Payment

The unit rate shall be full compensation for labour, materials, tools, and incidental costs required to carry out the work.

08-70-002 Headwall Repair - Concrete

The activity involves the repairs to damaged concrete headwalls and wingwalls, and to inlet/outlet concrete aprons. Concrete walls shall be inspected and repair works carried out as instructed by the Engineer to include breaking out and replacement of damaged concrete with similar material, and the rendering of open texture areas with cement mortar 1:4. Broken wall sections shall be re-built in 20/20 (1:2:4) concrete within formwork erected on the correct lines and levels in accordance with the Standard Drawings. Areas of new concrete and mortar shall be protected from direct sunlight and kept moist for 3 days.

Quality Control

The work shall be carried out to the satisfaction of the Engineer.

Measurement Unit: No

The measurement shall be the number of walls/aprons repaired.

Payment

The unit shall be full compensation for labour, materials, tools, and incidental costs required to carry out the work.

08-80- 002 : Gabions

The Contractor shall provide and install Gabions as retaining walls and anti-erosion structures at locations shown on the Drawings or as directed by the Engineer.

Gabions shall include mattresses and boxes and for purposes of construction, measurement and payment, no distinction shall be made between them.

Gabions shall be ‘Maccaferi” boxes or ‘Reno’ matresses or equivalent approved by the Engineer.

The surfaces on which the Gabions are to be laid prior to being filled with rock shall be

levelled to the depths and dimensions shown on the Drawings or as directed by the Engineer.

Gabion boxes shall be tied together with 3 mm galvanised binding wire securing all edges at 150mm intervals.

Work Method

The Contractor shall use **Labour** to carry out this item.

Quality Control

The placing and tying of the Gabions shall be approved by the Engineer before filling commences.

Measurement Unit: No

The measurement shall be the number of Gabion boxes installed.

Payment

The unit rate shall be the full compensation for labour, materials, and any incidental item costs necessary to carry out the work.

08-80-003 : Rockfill to Gabions

The Contractor shall provide selected rock, crushed if necessary, and carry out the packing and compacting of the rock inside the Gabion boxes.

The boxes shall be filled in layers from the sides towards the middle in an interlocking stone matrix to prevent deformation and bulging. The interior and top layers of the boxes shall be hand packed with smaller stone to form a tightly compact structure and rammed in place. Care shall be taken to ensure that each layer of boxes is filled evenly and to a level surface before the next course of boxes is placed.

Work method

The Contractor shall use **Labour** to carry out this activity.

Quality Control

The filling and compaction of the stones in the Gabion boxes shall be approved by the Engineer.

Measurement Unit m^3

Rockfill to Gabions shall be the volume of Gabions filled.

Payment

The unit rate shall be the full compensation for labour, tools, materials and incidental costs required for carrying out the work.

DRAWING

SECTION A-A

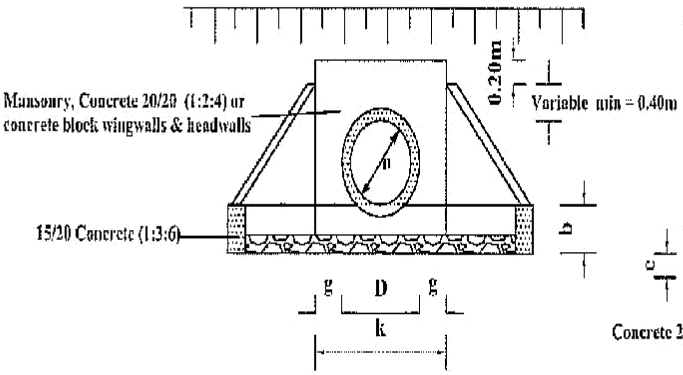

SECTION B-B

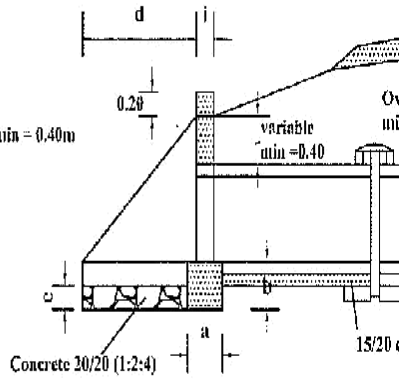

PLAN

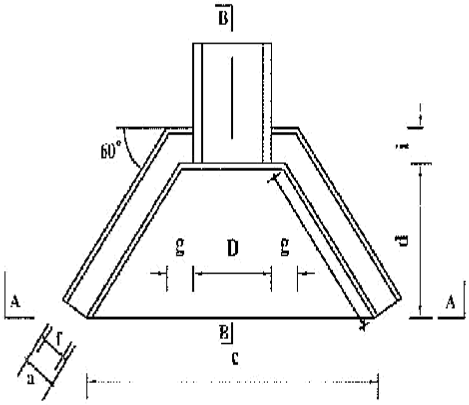

CULVERT TYPES	
X-SECTION WIDTH m	No. of pipes
4.50	6
5.50	7
6.50	8

PIPE DIAMETER IN M			TYPE A and C CONCRETE BL	
			450	600
DIMENSION		UNIT		
a	FOUNDATION	m	0.30	0.30
b	FOUNDATION	m	0.30	0.30
c	FOUNDATION	m	2.20	2.35
d	APRON	m	1.00	1.00
e	APRON	m	0.20	0.20
f	WALL	m	0.20	0.20
g	WALL	m	0.30	0.30
h	WALL	m	1.15	1.15
i	WALL	m	0.20	0.20
k	APRON	m	1.05	1.20
MATERIAL REQUIREMENT				
FOUNDATION (concrete)		m3	0.30	0.32
HEAD/WINGWALLS (Concrete/Masonry)		m3	0.42	0.49
APRON (concrete)		m3	0.33	0.36

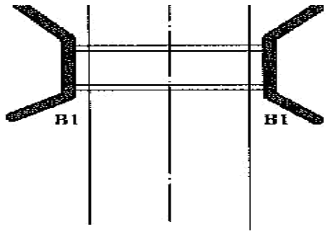

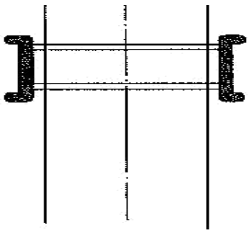

TYPE 2(ENTRY ONLY)

TYPE 4(ENTRY AND EXIT ON ACCESS)

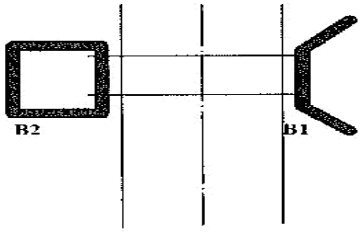

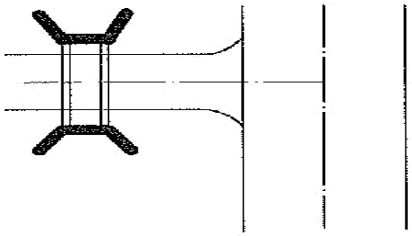

NOTE

1. The code numbers specify the shape and function and the code letter denotes the material;

A =Concrete block
B =Stone masonry
C =Concrete

SECTION A-A

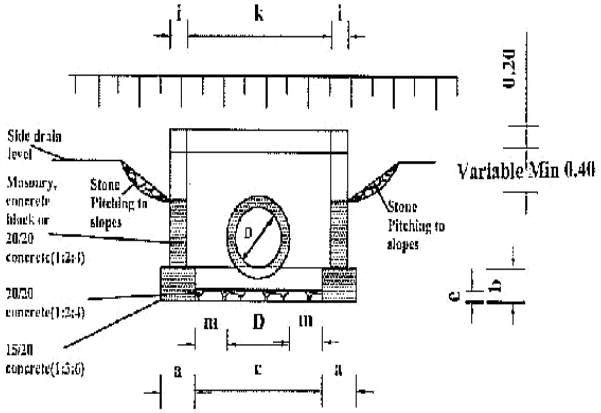

SECTION B-B

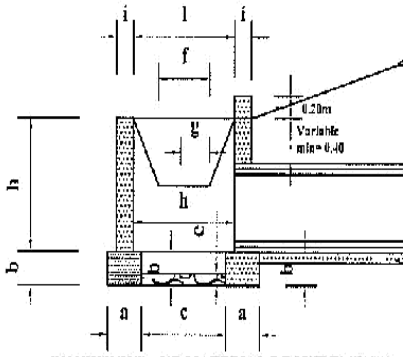

PLAN

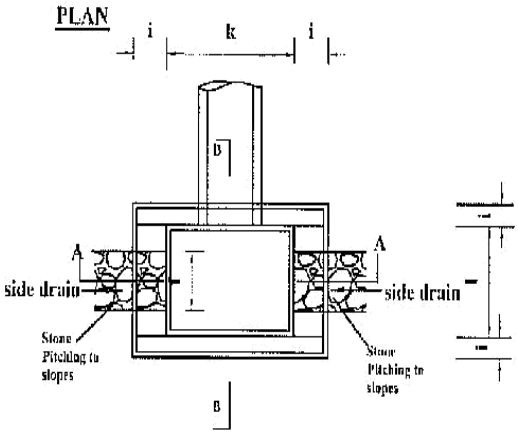

DIMENSIONS AND MATERIAL REQUIREMENTS

PIPE DIAMETER IN (M)			TYPE A CONCRETE BLOCKS			TY M
			450	600	900	45
	DIMENSION	UNIT				
a	FOUNDATION	m	0.30	0.30	0.30	0.4
b	FOUNDATION	m	0.30	0.30	0.30	0.3
c	FOUNDATION	m	1.10	1.10	1.40	1.2
d	APRON	m	0.90	0.90	0.90	1.0
e	APRON	m	0.20	0.20	0.20	0.2
f	DROP INLET	m	0.60	0.60	0.60	0.6
g	DROP INLET	m	0.30	0.40	0.60	0.3
h	DROP INLET	m	0.60	0.80	1.20	0.6
i	DROP INLET	m	0.20	0.20	0.20	0.4
k	DROP INLET	m	1.20	1.20	1.50	1.2
l	DROP INLET	m	1.00	1.00	1.00	1.0
m	DROP INLET	m	0.38	0.30	0.30	0.3
MATERIAL REQUIREMENT						
FOUNDATION (concrete)		m3	0.47	0.47	0.52	0.7
HEAD/WINGWALLS (Concrete/Masonry)		m3	0.56	0.72	1.15	1.2
APRON (concrete)		m3	0.24	0.24	0.30	0.2

SECTION A-A

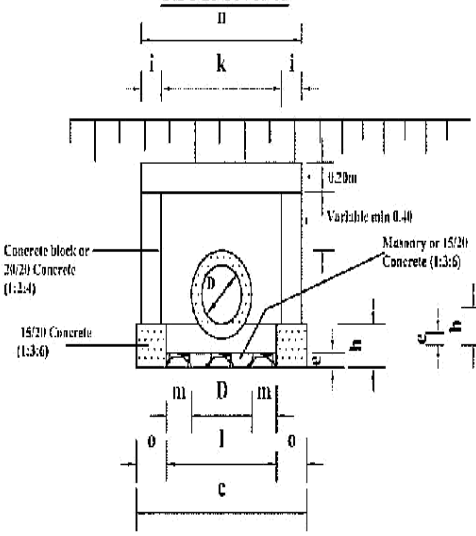

SECTION B-B

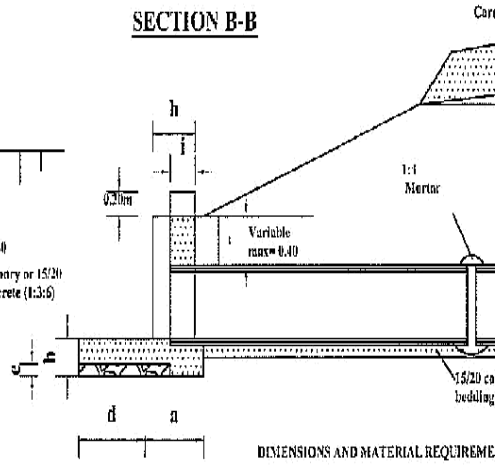

PLAN

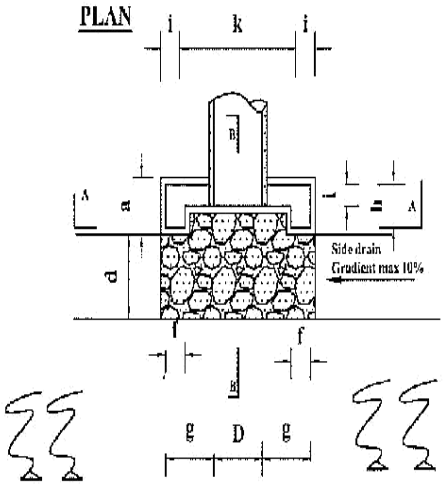

DIMENSIONS AND MATERIAL REQUIREME

	PIPE DIAMETER IN (M)		TYPE A and C C BLOCKS	
			450	600
	DIMENSION	UNIT		
a	FOUNDATION	m	0.50	0.50
b	FOUNDATION	m	0.30	0.30
c	FOUNDATION	m	1.55	1.70
d	APRON	m	0.60	0.60
e	APRON	m	0.20	0.20
f	HEADWALL	m	0.20	0.20
g	HEADWALL	m	0.50	0.50
h	HEADWALL	m	0.50	0.50
i	HEADWALL	m	0.50	0.50
k	HEADWALL	m	0.50	0.50
l	FOUNDATION	m	0.50	0.50
m	FOUNDATION	m	0.50	0.50
n	HEADWALL	m	0.50	0.50
o	FOUNDATION	m	0.50	0.50
MATERIAL REQUIREMENT				
	FOUNDATION (concrete)		0.23	0.19
	HEAD/WINGWALLS (Concrete/Masonry)		0.34	0.37
	APRON (concrete)		0.95	0.99

C-13

SECTION A-A

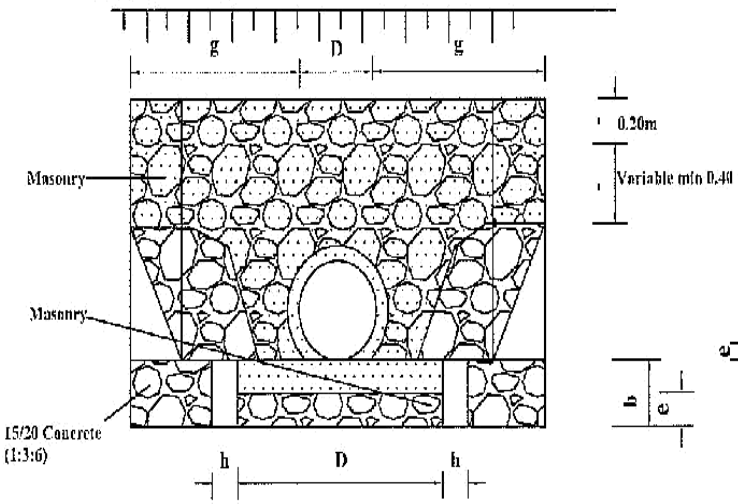

SECTION B-B

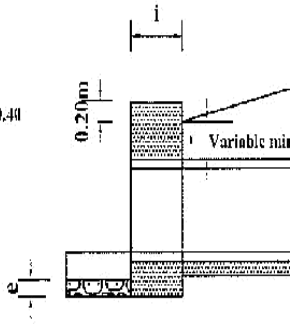

PLAN

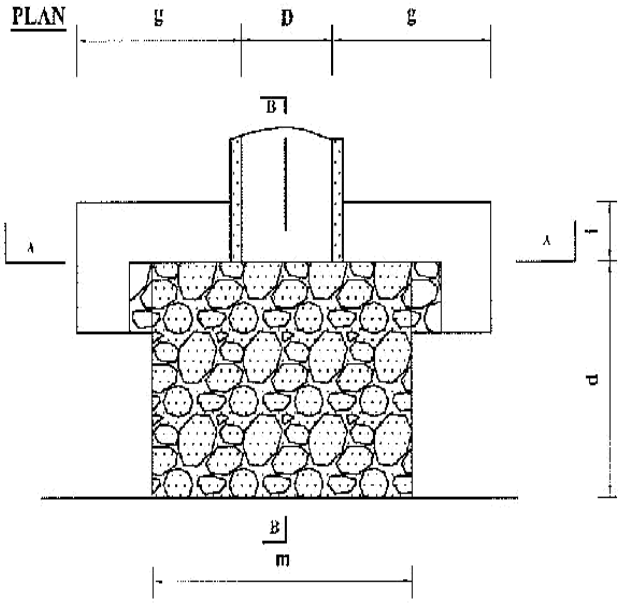

DIMENSIONS AND

PIPE DIAMETER (M)	
DIMENSION	
a	FOUNDATIO
b	FOUNDATIO
c	FOUNDATIO
d	APRON
e	APRON
f	HEADWALL
g	HEADWALL
h	HEADWALL
i	HEADWALL
m	FOUNDATIO
MATERIAL REQU	
	FOUNDATIO (concrete)
	HEAD/WING' (Concrete/Maso
	APRON (concrete)

SECTION A-A

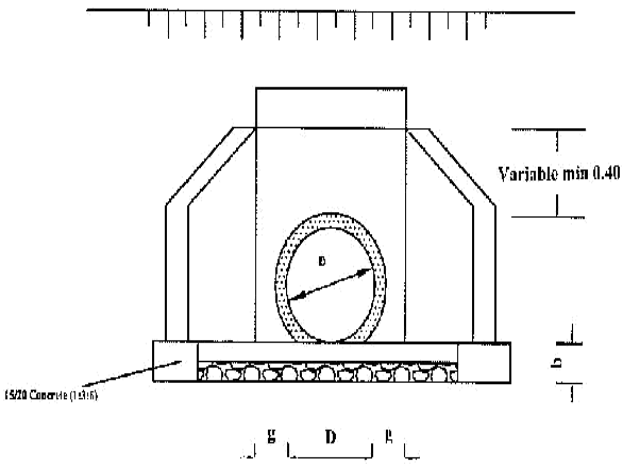

SECTION B-B

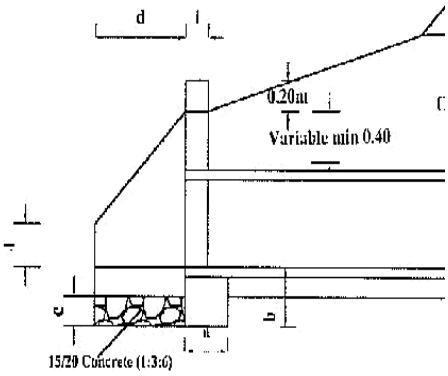

PLAN

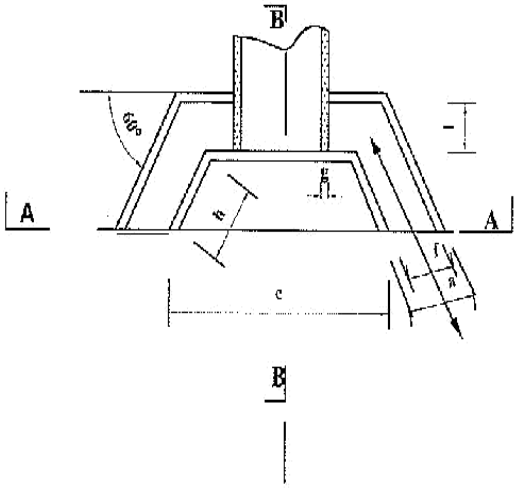

DIMENSIONS AND MATERIAL REQUIREMENTS

PIPE DIAMETER IN (M)			TYPE A (CONCRETE BLOCKS)		
			450	600	900
	DIMENSION	UNIT			
a	FOUNDATION	m	0.30	0.30	
b	FOUNDATION	m	0.30	0.30	
c	APRON	m	1.34	1.49	
d	APRON	m	0.60	0.60	
e	APRON	m	0.20	0.20	
f	WINGWALLS	m	0.20	0.20	
g	WINGWALLS	m	0.10	0.10	
h	HEADWALLS	m	0.69	0.69	
l	HEADWALLS	m	0.20	0.20	
k	HEADWALLS	m	0.65	0.80	
l	HEADWALLS	m	0.40	0.40	
MATERIAL REQUIREMENT					
	FOUNDATION (concrete 1:3:6)		0.18	0.20	
	HEAD/WINGWALLS (Conrete/Masonry)		0.29	0.32	
	APRON (concrete)		0.12	0.14	

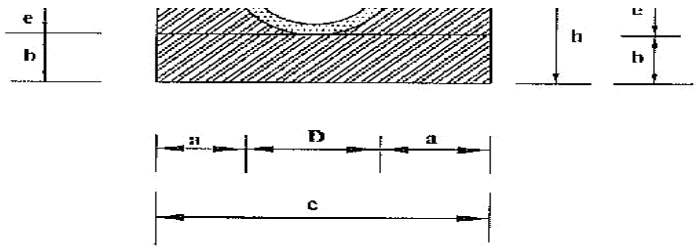

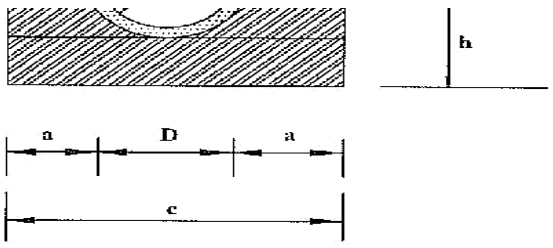

Diameter (D)	450 (mm)	600 (mm)	900 (mm)
a	0.15	0.20	0.20
b	0.10	0.15	0.15
c	0.86	1.12	1.48
d	0.56	0.72	1.08
e	0.14	0.18	0.27
f(min)	0.34	0.45	0.68
g	-	-	-
h	0.24	0.33	0.42
i	-	-	-
Concrete	Volume in (m3/m)		
Class 15/20	0.24	0.24	0.24
Application	-Fair subgrade condition -Overfill > 75% of the pipe diameter -Seasonal water flow only		
Remarks	Material for back/overfill shall be approved by the Engineer		

450 (mm)	600 (mm)	900 (mm)
0.15	0.20	0.20
0.10	0.15	0.15
0.86	1.12	1.48
0.56	0.72	1.08
0.28	0.36	0.54
0.34	0.45	0.68
-	-	-
0.38	0.51	0.69
-	-	-
Volume in (m3/m)		
0.20	0.37	0.56
-Fair to poor subgrade condition -Overfill > 75% of the pipe diameter -Seasonal water flow only		
Material for back/overfill shall be approved by the Engineer		

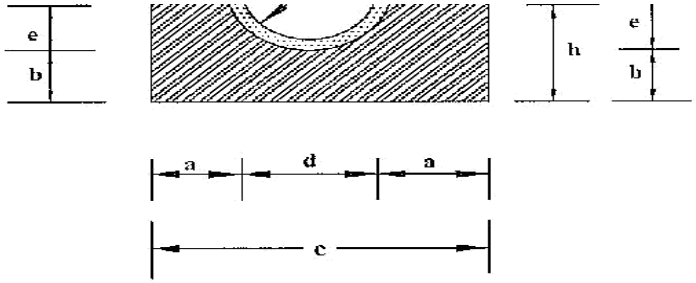

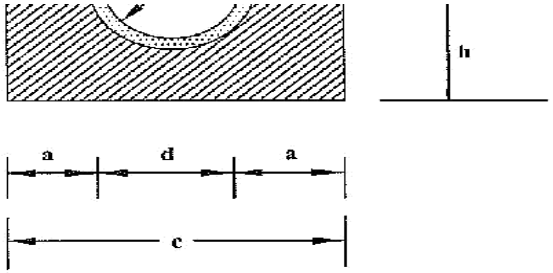

Diameter (D)	450 (mm)	600 (mm)	900 (mm)
a	0.15	0.20	0.20
b	0.10	0.15	0.15
c	0.86	1.12	1.48
d	0.56	0.72	1.08
e	0.42	0.54	0.81
f(min)	0.23	0.3	0.45
g	-	-	-
h	0.52	0.69	0.96
i	-	-	-
Concrete	Volume in (m3/m)		
Class 15/20	0.26	0.47	0.71
Application	-Fair subgrade condition -Overfill > 75% of the pipe diameter -Seasonal water flow only		
Remarks	Material for back/overfill shall be approved by the Engineer		

450 (mm)	600 (mm)	900 (mm)
0.15	0.20	0.20
0.10	0.15	0.15
0.86	1.12	1.48
0.56	0.72	1.08
0.46	0.52	0.78
0.15	0.15	0.15
0.15	0.15	0.15
0.81	1.02	1.38
0.28	0.35	0.45
Volume in (m3/m)		
0.37	0.61	0.92
-Fair to poor subgrade condition -Overfill > 75% of the pipe diameter -Seasonal water flow only		
Material for back/overfill shall be approved by the Engineer		

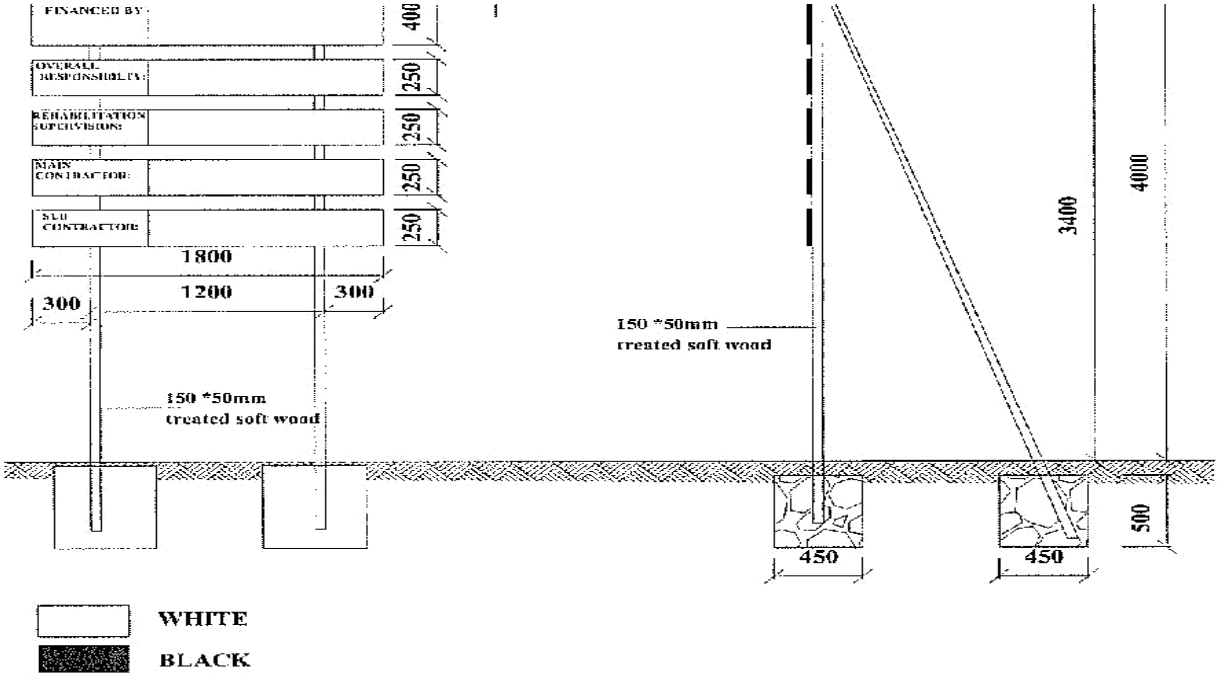

NOTES

1. The wording of the project sign board and the location to be as directed by the Engineer.
2. Materials to be used for fabrication of signboard shall be pressure impregnated treated softwood timber
3. Wording board posts to be attached to the posts with galvanised nails
4. Project board posts and struts to be embedded in concrete class 20/20(1:2:4)

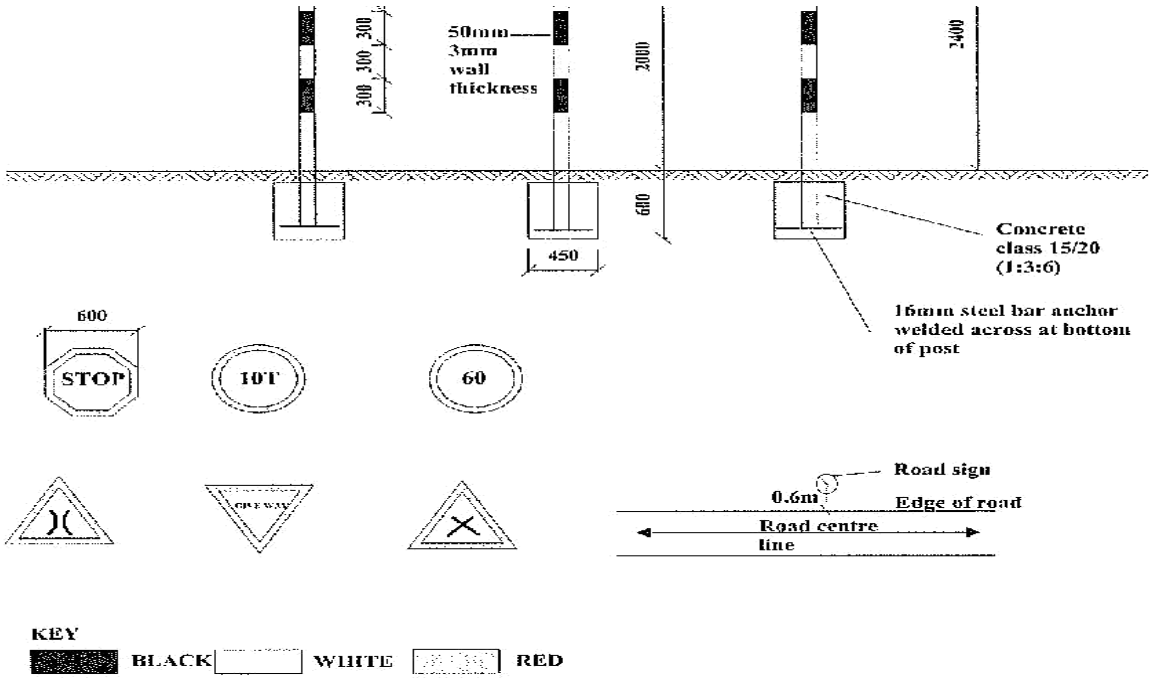

1. The type of sign required and their location shall be as shown on the Road Plan or as directed by the Engineer.
2. Sign plate to be 2mm thick mild steel plate
3. Sign post to be 50mm fixing clamps/brackets.
4. Sign plate to be fixed to steel tube by $ Nos M10 bolts and 50mm fixing clamps/brackets.
5. Sign paints shall be reflective.
6. The sign plate and post shall be treated by applying two coats of lead red oxide paint before applying a priming and two finish coats of approved paints. Paints used shall have a hard, durable and glossy finish.

PREAMBLE TO BILLS OF QUANTITIES

1. The Bills of Quantities form part of the Contract Documents and are to be read in conjunction with the Instructions to Tenderers and these Documents.

2. The prices and rates to be inserted in the Bills of Quantities are to be the full, inclusive value of the work described under the several items including all costs and expenses which may be required in and for the execution of the work described and for the Contractor's overheads and profits. The rates shall be VAT exclusive but include all other taxes, levies and fees applicable. The rates shall be based on the Works being carried out in accordance with the R2000 Strategy of using optimum labour resources.

3. Each item in the Bills of Quantities contains only a brief description of the required work. Fuller details and descriptions of the work to be done, the materials to be used, the standards of workmanship, methods of measurement and payment are to be found in the various sections of the Specifications and on the Drawings.

4. The Quantities set out in the Bills of Quantities are estimated and represent substantially the work to be carried out. There is no guarantee that the Contractor will be required to carry out all the quantity of work indicated under any one particular item or group of items in the Bills of Quantities. The basis of payment shall be the Contractor's rates and the quantities of measured work done in fulfilment of the obligations under the Contract.

Road name:

1. **St Joseph Kaaru-Marere road 3km;**
2. **Antubetwe mkt-Mwenje canteen road 1.5km;**
3. **Karichu-Kathatene road 2km.**

Bill of Quantities					Page: 1	
Bill No.1	**General: Office administration and overheads/ Preliminaries**				**Project**	
Item No.	**Description**	**Units**	**Quantity**	**Unit Bid Rate(Ksh)**	**Amount KSh**	**Technology**
01-80-016	Provide and erect publicity signs as directed by the Engineer	No.	1	25,000	25,000	LB-MB
	Total Carried Forward to Summary:				25,000	

Road name:

4. **St Joseph Kaaru-Marere road 3km;**
5. **Antubetwe mkt-Mwenje canteen road 1.5km;**
6. **Karichu-Kathatene road 2km.**

Bill of Quantities					Page: 2	
Bill No.10	**GRADING AND GRAVELLING WORKS**				**Project:**	
Item No.	**Description**	**Units**	**Quantity**	**Unit Bid Rate(Ksh)**	**Amount Kshs**	**Technology**
10-50-001	Heavy grading without watering and compaction	M^2	42,000			MB/LB
	Total Carried Forward to Summary:					

Road name:

1. **Karichu-Kathatene road 2km.**

Bill of Quantities					Page: 3	
Bill No.10	**GRADING AND GRAVELLING WORKS**				**Project:**	
Item No.	**Description**	**Units**	**Quantity**	**Unit Bid Rate(Ksh)**	**Amount Kshs**	**Technology**
10-60-001	Provide gravel wearing course-excavation, free haul, spread, water and compact gravel to specifications	M^3	1,500			MB/LB
	Total Carried Forward to Summary:					

Bill of Quantities		Page:4
	Summary	**Project:**
Item No.	**Description**	**Amount (Kshs)**
1	**General: Office administration and overheads/Preliminaries**	25,000.00
10	**Grading And Gravelling Works**	