THE COUNTY GOVERNMENT OF MERU

DEPARTMENT FOR TRANSPORT AND INFRASTRUCTURE

ROAD OPENING TIGANIA WEST

ATHWANA WARD

TENDER NO:CGM/067/2016/2017

THE COUNTY SECRETARY
THE MERU COUNTY GOVERNMENT
P.O BOX 120-60200
MERU
FY 2016-2017

1 Table 1: Summary of Instructions to the Tenderers

Item #.		Mandatory qualification Requirements	
1		ELIGIBILITY - Copy of National ID or passport for all Directors	
2		BID SECURITY - Unconditional guarantee, in the format and conditions provided Must be valid for 150days	
3		Attending pre-tender site visit for the works.	
4		Certified Copy of Certificates of Registration/Incorporation.	
5		Principal place of business (attach business permit or trading license)	
6		Certified Certificate of registration with National Construction Authority	
7		Certified Copy of Tax compliance certificate	
8		Properly and dully filled Form of Tender	
9		Properly and dully filled Tender Questionnaire	
10		Properly and dully filled Confidential Business Questionnaire	
		Technical Qualification Requirements	
11		Financial Capacity	
	1	**Company turnover for the last two years**	
	2	**Profitability of the company for the last two years**	
	3	Past two years Audited Financial Reports of the tenderer	
	4	Current one year Bank statement.	
12		Contractual misconducts and litigation - Legal Capacity/Litigation History (attach affidavit)	
13		Experience (5 YEARS AND ABOVE)	
		Bidder to submit the following - Completion certificate, Taking Over Certificate or Substantial Completion Certificate of relevant work in the previous 5 years - Value of ongoing work must be < 50% of	
	A	Specific Experience in Related Works - Attach certificate of completion	
14		Key personnel - Provide List of professional and technical staff and their resume - General Experience (CV), - Certified Qualification Certificate	
	b	Site Agent - Degree (Civil Engineering)	
	C	Foreman -Diploma(Civil Engineering)	
	c	Fundis - Certificate(Civil Engineering)	
15	A	Equipments	
		Bidder to submit the following - Ownership list of required equipment and/or Authorization letter of hiring from M&T or reputable hiring company	
16		**Registration as a contractor with NCA**	

		1. NCA 1 [building/roads] 2. NCA 2 [building/roads] 3. NCA 3 [building/roads] 4. NCA 4 [building/roads] 5. NCA 5 [building/roads] 6. NCA 6 [building/roads] 7. NCA 7 [building/roads]	
17	a	Working Schedule and Projected CashFlow.	
		Bidder to submit the following Proposals 1. Signed work program chart 2. Signed Cash flow plan during the Contract period.	
18		Certification as true the above information	
19		The formula for determining financial score is GIVEN in the document as follows: The formulae for determining the Financial Score (Sf) shall: - Sf = 100 X FM/F where Sf is the financial score; Fm is the lowest priced tender and F is the price of the tender under consideration. Tenders will be ranked according to their combined technical *(St)* and financial *(Sf)* scores using the weights *(T*=the weight given to the Technical score: *P* = the weight given to the Financial score; *T* + *p* = I) indicated in the Appendix. The combined technical and financial score, S, is calculated as follows: - *S* = *St* x *T* % + *Sf*x *P* %. Appendix to information to TENDERERS. Assigns weight of **0.8** to technical score and **0.2** to financial score.	

TABLE OF CONTENTS

CONTENTS **PAGE NO.**

Invitation for tenderes.....4

Form of Tender.....5

AGREEMENT

Article 1: General provision…….……6

Article 2: Obligation of the Employer…….…..... 6

Article 3: Employer's Representative…….……7

Article 4: Contractor's Obligations…….…….7

Article 5: Design by Contractor……...……8

Article 6: Employer's Risk……...……8

Article 7: Time for completion……..8

Article 8: Taking Over…….……..8

Article 9: Remedying Defects……..9

Article 10: Variations and Claims……..9

Article11: Contract period and percentage…….…..... 9

Article 12: Default…….……....9

Article 13: Risk and Responsibility…….……....10

Article 14: Insurances…….…..… 10

Article 15: Resolutions of Inspections…… 10

Article 16: Conditions of Contract…….…….. 10

ANNEX 1 The Works …….…… 11

ANNEX 2 Specifications.....……...…….. 11

ANNEX 3: Bill of Quantities ……...24

ANNEX 4 Technical evaluation criteria .....……...75

INVITATION FOR TENDERS

ROAD OPENING ATHWANA WARD

1.1 The **County Government of Meru** invites sealed tenders for the **spot improvement** and **Routine maintenance** of the above mentioned roads respectively**.**

1.2 Interested eligible candidates may obtain further information and inspect tender documents at **MERU COUNTY HEADQUATERS ,ROOM 118,MERU COUNTY GOVERNORS OFFICES,BOX 120 MERU** during normal working hours.

1.3 A complete set of tender documents may be obtained by interested candidates free of charge.

1.4 Tender surety security in the amount of 2% of the tendered sum is required as detailed in the instructions to bidders.

1.4 Prices quoted should be net inclusive of all taxes, must be in Kenya shillings and shall remain valid for 90 days from the closing date of tender.

1.5 Completed tender documents are to be enclosed in plain sealed envelopes marked with Tender name and reference number and deposited in the Tender Box at **MERU COUNTY GOVERNORS OFFICES,GROUND FLOOR** or to be addressed to MERU **COUNTY GOVERNMENT,BOX 120 MERU** so as to be received on or before 12.00 hours on…….

1.6 Tenders will be opened immediately thereafter in the presence of the candidates or their representatives who choose to attend.

…… (Signed)

2 FORM OF TENDER

TO: CHIEF EXCECUTIVE OFFICER, DEPARTMENT OF TRANSPORT AND INFRASTRUCTURE MERU COUNTY GOVRNMENT _____*[Date]*

Name of Contract:

ROAD OPENING ATHWANA WARD

Dear Sir,

1. In accordance with the Conditions of Contract, Specifications, Drawings and Bills of Quantities/Schedule of Rates for the execution of the above Works, **We,** the undersigned offer to construct, install and complete such Works and remedy any defects therein for the sum of Kshs._____*[Amount in figures]*Kenya Shillings_____ _____*[Amount in words]*

2. We undertake, if our Tender is accepted, to commence the Works on the commencement date and to complete the whole of the Works comprised in the Contract within the time stated in the Appendix.

3. We agree to abide by this Tender until _____*[Insert date],* and it shall remain binding upon us and may be accepted at any time before that date.

4. Unless and until a formal Agreement is prepared and executed this Tender together with your written acceptance thereof, shall constitute a binding Contract between us.

We understand that you are not bound to accept the lowest or any Tender you may receive.

Dated this _____ day of _____20_____

Signature _____in the capacity of_____

duly authorized to sign Tenders for and on behalf of _____*[Name of Tenderer*] of _____[*Address of Tenderer]*

Witness: Name_____

Address_____

Signature_____

Date_____

AGREEMENT

BETWEEN

THE GOVERNMENT OF THE REPUBLIC OF KENYA

AND

This Contract is made this…….day of…….20……

between THE GOVERNMENT OF KENYA, represented by the COUNTY GOVRNMENT OF MERU of P.O. Box 120 – 60200,MERU (Hereinafter called the Employer) acting through his representative CHIEF EXCECUTIVE OFFICER, DEPARTMENT OF TRANSPORT AND INFRASTRUCTURE , P.O. Box 120 , MERU of the one part and also of…….. (Hereinafter referred to as "the Contractor") of the other part.

Whereas the Employer is desirous of improving and maintaining the roads as described below,

Name of the project:

ROAD OPENING ATHWANA WARD

County : Meru.

Constituency: TIGANIA WEST

Ward **Athwana** WARD

and has accepted the Offer of the Contractor to execute improvement and maintenance works as defined hereinafter, AND Whereas the Contractor represented to the Employer that he has the required capacity and ability, and has agreed to execute the Works on the Terms and Conditions set forth in this Contract, for the Tender Sum of Kshs ……..……..……..……..……(wor ds) …….(figures)

NOW THEREFORE the Parties hereto agree as follows:

Article 1: GENERAL PROVISIONS

1.1. The documents forming the Contract are to be taken as mutually explanatory. If ambiguity or discrepancy is found in the documents the Employer shall issue necessary instructions to the Contractor.

The language of the Contract shall be English. The law of the Contract is the Republic of Kenya.

Article 2: OBLIGATIONS OF THE EMPLOYER

The Employer shall provide the Site and right of access thereto at the date of Commencement.

The Employer shall ensure that the Contractor's claims for payment are settled timeously.

The Employer shall inspect the Contractor's work regularly.

No approval or consent or absence of comment by the Employer shall affect the Contractor's obligations.

Article 3: EMPLOYER'S REPRESENTATIVE

The County Government of Meru will have overall responsibility for the Contract, and will be represented by the Department of transport and Infrastructure for the day-to-day management of the Contract.

The Chief Executive Officer shall appoint and provide a Road Supervisor by the name of…….. who shall from time to time assign work to the Contractor. The Engineer shall notify the Contractor in writing of any change in the Road Supervisor.

3.3. The Chief Executive Officer shall provide the Contractor with an initial Work plan against which the Contractor shall carry out the Works. The Chief Executive Officer shall be entitled to vary the Work plan according to circumstances and to issue instructions to the Contractor accordingly.

Article 4: CONTRACTOR'S OBLIGATIONS

The Contractor shall carry out the Works described in Annex 1and the Work Plan Annex 3 properly and in accordance with the Contract. The Contractor shall provide all supervision, labour and tools which may be required.

The Contractor shall submit to the Employer for consent the name and particulars of the person authorized to receive instructions on behalf of the Contractor.

The Contractor shall comply with all instructions given by the Employer in respect of the Works.

The Contractor shall not subcontract any part of the Works without the consent of the Employer.

The Contractor shall, in the implementation of this contract, use labour based methods whenever possible.

The Contractor shall recruit labour for the Works from the local communities and shall take particular note of the Government policy on the recruitment of women and youth. The target for each group shall be 30% of the labour force, which the Contractor shall take all possible measures to attain.

The Contractor shall comply with the Kenya Labour Laws in respect of the rights working conditions and wages for the labour force. The task rates set for labour shall be approved by the Engineer.

In the event of the failure of the Contractor to pay the labour the Employer shall be entitled to pay directly and to deduct the appropriate amount, plus a 10% administrative charge, from any monies due to the Contractor under the Contract.

The Contractor shall maintain records of time worked and remuneration paid to his/her employees and shall avail these records to the Employer for inspection when so requested.

The Contractor shall set fair and manageable task rates to each labourer, in consultations with the Employer.

Article 5: DESIGN BY CONTRACTOR

The Contractor shall not be responsible for any Works design.

Article 6: EMPLOYER'S RISKS

6.1 Any failure by the Employer and any delay or disruption caused by any Variation are the relevant Employer's Risks.

Article 7: TIME FOR COMPLETION

The Contractor shall commence the Works on the Commencement Date……..... and shall proceed expeditiously and without

delay and shall complete the Works within the Time for Completion, given as Four (4) months.

7.2 The Contractor shall be entitled to an extension of the Time for Completion where delay is caused by an action, or failure of action of the Employer and/or any other unforeseen circumstance. All such extension of time must be requested by the contractor timeously and approved by the Employer

Article 8: TAKING OVER

8.1. The Contractor may notify the Employer when the Works are considered to be complete.

The Employer shall notify the Contractor when he considers that the Contractor has completed the Works and stating the date accordingly. Alternatively the Employer may notify the Contractor that the Works, although not fully complete, are ready for taking over, stating the date accordingly. The Contractor shall promptly complete any outstanding work.

Article 9: REMEDYING DEFECTS

9.1. The Employer may, within one month after the Completion date in 8.2, notify the Contractor of any defects. The Contractor shall remedy at no cost to the Employer any defects due to the Contractor's workmanship not being in accordance with the Contract.

Article 10 VARIATIONS AND CLAIMS

The Employer may instruct Variations

The Employer shall value the Variations using appropriate rates within the Contract or by a lump sum price agreed between the Parties, or by new rates which the Engineer considers appropriate.

Article 11: CONTRACT PRICE AND PAYMENT

At not less than monthly intervals, the Contractor shall measure the Works in accordance with the Bill of Quantities and shall submit a statement to the Road Supervisor. No Payment shall be made for Mobilisation and Establishment of the Site. The Road Supervisor shall certify on the statement to the Engineer that the Works have been completed satisfactorily.

The Employer shall pay the Contractor, upon the Engineer's approval of the Contractor's statement, within 30 days of the date of the certification of the statement. If the Employer disagrees with any part of the Contractor's statement, he shall specify his reasons for disagreement when making payment. The Employer shall not be bound by any sum previously considered by him to be due to the Contractor.

Article 12: DEFAULT

The Employer shall give notice to the Contractor where he considers the Contractor to be in default of the Contract. If the Contractor fails to remedy the default within a stated period the Employer may give notice of the termination of the Contract.

After termination the Contractor shall be entitled to payment of any unpaid balance of the value of the Works executed.

Article 13: RISK AND RESPONSIBILITY

The Contractor shall take responsibility for the care of the Works from the Commencement Date to the date of Take Over.

Article 14: INSURANCES

The Contractor, prior to commencing the Works, shall effect Third Party and Workers Compensation Insurances and provide evidence to the Employer that the required policies are in force.

Article 15: RESOLUTION OF DISPUTES

The Parties shall use their best efforts to settle amicably all disputes arising out of or in connection with the Contract.

Any dispute not resolved under 15.1 shall be referred to a single Arbitrator nominated by ……. in whose Area the Contract is located in accordance with, and subject to the provision of the Arbitration Act of Kenya or any Statutory Modification thereof.

Article 16 CONDITIONS OF CONTRACT

It is understood that these Conditions of Contract follow the FIDIC Short Form of Contract which shall be referred to for any necessary clarification

It is hereby understood that the Annexes to the Contract shall be read together with the Contract and shall form an integral part of it.

In witness whereof of the duly authorised representatives of the Parties hereto have signed this Contract the day and the year first written at …….Kenya.

--- ---

For and on behalf of the
Government of kenya
County government of Meru Contractor
Department of roads and Infrastructure

…… ……
Witness Witness

2.1.1 EXTENT OF WORKS

The works to be executed under this Contract comprise the following:-

Grading

BILL 01: PRELIMINARY AND GENERAL ITEMS

Scope:

This bill comprises those items that are required at the Commencement and Completion of the Works or that are Provisional Items applicable for the duration of the Works.

01-50- 001 Mobilization and Establishment of the Site

The Contractor shall provide all equipment, tools, materials, temporary offices, stores and housing required to carry out the Works.

The Contractor shall ensure that all possible means of protection are given to the labour force at all times. Such protection shall include provision of high visibility clothing or vests, goggles and masks for workers in potentially dangerous locations or dealing with potentially harmful materials. The Contractor shall also maintain first aid kits with a minimum of the following items:-

- Non Stick wound dressing
- Selection of plaster/band aids
- Crepe bandages
- Gauze and cotton wool
- Antiseptic solution (washing wounds)
- Antiseptic cream – Betadine, Burnol
- Pain killers Panadol, Disprin
- Anti diarrhoea – Immodium, Diadis, Charcoal
- Anti histamine – Piriton, Triludan
- Anti nausea – Stemetil
- Eye ointment
- Oral re-hydration sachets
- Surgical gloves

Measurement and Payment: NA

01-60- 001 Contract Supervision

Provisional sum available for the Engineer for expenses incurred for supervising the contract such as allowances, casual wages and transportation within the project area.

Measurement and Payment:

Provisional Sum: Payable by the Contractor to the Engineer through certification as directed by the Engineer. No mark up is included in this item.

Work Method: NA

01-60- 002 Clearance on Completion

On Completion of the Works, all temporary housing, equipment, signs and tools shall be removed from the site, and the site left in good order to the satisfaction of the Engineer.

Measurement and Payment

The Lump Sum payment will be made upon approval by the Engineer that the Clearance has been satisfactorily carried out.

Work Method: NA

01-60-003 Insurance

The Contractor shall provide Insurance in accordance with the Conditions of Contract as indicated in the Appendix to form of tender for Rehabilitation and Improvement Contracts and Clause 14.1 for small works conditions of contract.

Measurement and Payment

Lump Sum payment for this item will be made upon the production of satisfactory evidence by the Contractor that Insurances have been affected.

Work Method: NA

01-60-004 Quality Control Tests

The Engineer may instruct the Contractor during the progress of the Works to carry out quality control tests to check materials and standards of workmanship, against the Specifications.

Where such tests indicate defective standards the Engineer shall instruct the Contractor to rectify the defects to the Engineer's satisfaction and at the Contractor's expense.

The Engineer shall include a Provisional Sum for this item to be expended only as and when the Contractor is instructed to carry out tests at approved material testing laboratories.

Measurement and Payment

Reimbursable item based on actual costs incurred by the contractor including sampling, transportation and testing.

Work Method: NA

01-60-005 Publicity Sign Boards

The Contractor shall provide Sign Boards as specified on the Drawings or as directed by the Engineer. The Sign Boards shall be placed at the beginning and end of the road or road bill covered by this Contract.

Sign Boards shall be maintained for the duration of the Works, and removed on completion.

Quality Control

The Engineer shall check that Sign Boards have been erected in accordance with Drawings and Specifications.

Measurement: Number

The unit of measurement shall be number of Sign Boards erected

Payment

The unit rate shall be the full compensation for labour, tools, materials and incidental costs required for carrying out the work.

Work Method: N

01-60- 006 Drinking Water

The Contractor shall provide safe drinking water on site for workers at a reasonable distance from all work locations, for the duration of the Works.

Quality Control

The Engineer shall check regularly that adequate supplies of water are available throughout the Site.

Measurement and Payment

A Lump Sum shall be paid on a Monthly basis upon the approval of the Engineer that adequate supplies have been provided.

Work Method: **LB**

01-60-007 Provision of site sanitation facilities

The Contractor shall provide sanitation facilities on site for workers at a reasonable distance from all work locations, for the duration of the Works. This can be in the form of shallow pit latrines that are

appropriately covered. All shallow pit latrines shall be filled in after the end of use.

BILL 04: SITE CLEARANCE

Scope

This bill covers the clearance of bushes, shrubs, grasses, trees, stumps, boulders, stripping and grubbing of the topsoil, removal of anthills and other unsuitable materials for the specified widths of the road, quarry and borrow areas. The distinction between light and heavy bush shall be decided by the Engineer.

The minimum site clearing widths for each of the activities shall be as shown in Table 4.1

Table 4.1: Site Clearing Widths

Road Category	*Running Surface*	*Stripping and Grubbing*	*Trees, Stumps, Boulders*	*Bush Clearing*
A/B/C + Secondary Roads	6.0 m	10.6 m	10.6 m	14.0 m
D/E + Minor Roads	5.4 m	10.0 m	10.0 m	13.0 m
RAR Roads	4.5 m	7.9 m	8.0 m	11.0 m
Minor / RAR roads with insufficient widths or Temporary sections	3.5 m	6.9 m	7.0 m	9.0 m

04-50-002 Grass Cutting

Grass shall be defined as any form of plant growth including small shrubs having a girth of not more than 100mm measured at height of 200mm above ground level.

The grass shall be cut to height of not more than 50 mm above the ground. The width limits shall be as instructed by the Engineer. All cut grass shall be removed from the carriageway, side drains, mitre drains and inlets and outlet drains of structures/culverts and deposited in approved spoil dumps

Burning of the grass shall not be allowed and care shall be taken not to damage roadside fixtures such as signs and marker posts.

This activity shall be carried out as either Machine Based (Mechanical Mowing) or as Labour Based as defined in the Bills of Quantity or as instructed by the Engineer.

Grass cutting shall be done off-carriageway and shall not include areas designated for grubbing.

Work Method: **LB or MB**

Quality Control

The road width for grass cutting shall be measured at 50-m intervals and shall be free of grass after the operation.

Measurement: m^2

The measurement shall be area of grass cut, based on the standard width and measured length of clearing.

Payment

The unit rate shall be full compensation, for equipment, labour, materials, tools, and incidental costs required to carry out the work.

04-50-003 Bush Clearing (Heavy)

Where the Engineer designates an area as Heavy Bush (based on the undergrowth density) the Contractor shall clear all vegetation including small trees, shrubs and undergrowth, **and their root systems**, and shall salvage any re-useable timber or other material by cutting into logs and stacking. Other cleared material shall be collected and disposed of off-site as directed by the Engineer.

This activity shall be carried out as either Machine Based or as Labour Based as defined in the Bills of Quantity or as instructed by the Engineer.

Work Method: **LB or MB**

Quality Control

The Engineer shall check the cleared widths at 50 metre intervals

Measurement Unit: m^2

The measurement shall be the area cleared to the specified width over the length as instructed by the Engineer.

Payment:

The unit rate shall be the full compensation for all labour, tools, equipment and incidental costs required to complete the work.

04-50-004 Bush Clearing (Light)

The Contractor shall clear all vegetation including small trees, and shrubs with **their root systems**. Grasses and any undergrowth shall be cut to a height of not more than 100mm. The cleared material shall be collected and disposed of away from the side drains and in a manner that causes no visibility obstruction to traffic.

This activity shall be carried out as either Machine Based or as Labour Based as defined in the Bills of Quantity or as instructed by the Engineer.

Work Method: **LB or MB**

Quality Control

The Engineer shall check the cleared widths at 50 metre intervals.

Measurement Unit: m^2

The measurement shall be the area cleared to the specified width over the length as instructed by the Engineer.

Payment:

The unit rate shall be the full compensation for all labour, tools and incidental costs required to complete the work.

04-50-005 Pruning Tree Branches

Where instructed by the Engineer, the Contractor shall trim tree branches to improve visibility. Cut material shall be collected and disposed of as directed by the Engineer and burning of waste material shall not be permitted.

Work Method: **LB**

Quality Control

The Engineer shall check for visibility improvement.

Measurement and Payment

A Provisional Sum shall be allowed for this item, which shall be paid under Day works.

04-50-006 Trees and Stumps Removal (200-450mm girth)

Trees and Stumps outside the construction width but within the road reserve having a trunk girth of between 200-450mm at a point 600mm above the ground shall only be removed on the instruction of the Engineer.

The Contractor shall excavate around any trees to be removed to a depth not less than 0.5 m before cutting the roots. Existing stumps shall be uprooted in the same manner. All holes left by the removal of trees and stumps shall be back-filled with approved material and compacted to existing ground level. Cut material and stumps shall be collected and disposed of as directed by the Engineer. Burning of waste material shall not be permitted.

Work Method: **LB**

Quality Control

The Engineer shall approve the removal, backfilling and satisfactory disposal of all waste material.

Measurement Unit: No

The measurement shall be the number of trees and stumps removed.

Payment

The unit rate shall be the full compensation for all labour, tools and incidental costs required to complete this item.

04-50-007 Trees and Stump Removal (>450mm girth)

All the requirements of item 04-50-003 shall apply for trees and stumps greater than 450mm girth. In addition any re-useable timber from trees removed shall be cut into logs not more than 1.5 metres long and stacked as directed by the Engineer.

Work Method: **LB**

Quality Control

The Engineer shall approve the removal, backfilling and satisfactory disposal of all waste material.

Measurement Unit: No

Measurement shall be the number of trees and stumps removed

Payment:

The unit rate shall be the full compensation for all labour, tools, equipment and incidental costs required to complete this item.

10-50- 004:Heavy Manual Reshaping (Grub edge, fill gullies and Reshape carriageway)

This activity involves trimming the edge of the carriageway, grubbing grass from the carriageway filling gullies and ruts on the carriageway and reshaping of the camber of the road to the original standard and shape. No grass shall be grubbed from the shoulders, but it shall be cut to a maximum height of 50mm.

For earth roads materials from the side drains may be used to reshape the carriageway and fill gullies. Where additional suitable material is required to reinstate the camber to the required shape, this material shall be obtained from approved sources nearest to the final deposition area.

For gravel roads the gravel shall be obtained from the stacks placed at intervals along the road for this purpose if applicable.

The fill material shall be watered, mixed and compacted using suitable tampers to a finished level 25mm above the surrounding road surface.

This activity shall be carried out before and after the rains, or as directed by the Engineer.

The Contractor shall apply **Labour** methods to carry out this item.

Work Method: **LB**

Quality Control

- The width of the carriageway including the shoulders shall be checked at 100m intervals with tolerance of +50mm or -20mm
- The camber shall be checked using camber board at 50m intervals and shall have a tolerance of ± 1%
- The quality of fill material shall be approved by the Engineer
- The minimum compaction to be applied to fill areas shall be such that no rammer imprint on the surface shall be seen.

Measurement Unit: m^2

The measurement shall be the area of carriageway shaped.

Payment

The unit rate shall be the full compensation for labour, tools and incidental costs required for carrying out the work.

BILL 08: CULVERT AND DRAINAGE WORKS

This bill covers all Works in connection with the installation of concrete pipe culverts; inlet and outlet structures; drifts and drainage protection Works; and the construction of Scour Checks

08-50-002: Ditch Cleaning

i Partially silted

Partially silted drains are those that are less than half silted and require only cleaning.

All deposited material, debris, and vegetation shall be removed and the drain shaped to the original cross section and left in a free-draining condition. Suitable material may be used to fill depressions and potholes on the carriageway. All debris and other unsuitable material removed from the side drains shall be disposed of well clear of the drainage system in approved spoil dumps where it will not cause any obstruction or be washed back.

The side drains, mitre drains and catch water drains shall be cleaned before the onset of the rains or as directed by the Engineer.

This activity shall be carried out either as Machine Based, Labour Based or a mixture of the two as defined in the Bills of Quantity or as instructed by the Engineer.

Work Method: **LB, MB, LB-MB**

Quality Control

Appropriate drain templates shall be used to check and control the dimensions of the drains. The longitudinal profile of the drains shall be checked using boning rods, to ensure free flow.

Measurement Unit: m

The measurement shall be the length of drain desilted or cleaned to the specified cross section.

Payment

The unit rate shall be full compensation, for labour, tools, and incidental costs required to carry out the work.

ii Fully silted

Fully silted drains shall be those that are greater than half-silted and require re-excavation
or reshaping.

All deposited material, debris, and vegetation shall be removed and the drain shaped to the original cross section and left in a free-draining condition. Suitable material may be used to fill depressions and potholes on the carriageway. All debris and other unsuitable material removed from the side drains shall be disposed of well clear of the drainage system in approved spoil dumps where it will not cause any obstruction or be washed back.

The side drains shall be desilted or re-excavated before the onset of the rains, or as directed by the Engineer.

This activity shall be carried out either as Machine Based, Labour Based or a mixture of the two as defined in the Bills of Quantity or as instructed by the Engineer.

Work Method: **LB, MB, LB-MB**

Quality Control

Appropriate drain templates shall be used to check and control the dimensions of the drains. The longitudinal profile of the drains shall be checked using boning rods, to ensure free flow.

Measurement Unit: m

The measurement shall be the length of drain re-excavated or re-shaped to the specified cross-section.

Payment

The unit rate shall be full compensation for equipment, labour, tools, and any incidental costs required to carry out the work.

08-50-003: Ditch Works earth fills.

This activity involves the reinstatement/protection works of culvert outlets by filling the resultant eroded ditch gullies with specified suitable soft material to ensure free passage of water at all times without causing further damage. The ditch shall be excavated to firm ground and shaped to the required suitable shape (depth, width, levelled and smoothened) to the satisfaction of the engineer prior to filling. The fill material shall be deposited in layers as directed by the Engineer.

The filling shall be carried with approved soft material and compacted in layers not exceeding 150 mm loose depth or in thickness that shall not exceed the maximum that the equipment and method of operation can process to meet the required compaction as directed by the Engineer.

The Contractor shall first reshape the eroded ditch gullies to suitable shapes for working, remove any unsuitable materials, supply, dump, spread and process and compact in accordance with Section 508 of the Standard Specifications or as instructed by the engineer.

Work Method: LB-MB

Quality Control:

The Engineer shall approve the borrow materials, measure the volume of the borrow fill materials, the compaction achieved of each layer and the gradient of the out fall to avoid further erosion.

Measurement Unit: m^3

The measurement shall be the volume of the fill material excavated, transported and deposited to fill the ditch gullies.

Payment:

The unit rate shall be the full compensation for all labour, materials, tools, equipment and incidental costs required to complete the work.

08-50-004: Ditch Works rock fills. Supply and fill

This activity involves the reinstatement/protection works of culvert outlets by filling the resultant eroded ditch gullies with specified suitable hard material to ensure free passage of water at all times without causing further damage. The ditch shall be excavated to firm ground and shaped to the required suitable shape (depth, width, levelled and smoothened) to the satisfaction of the engineer prior to filling. The fill material shall be deposited in layers as directed by the Engineer.

The filling shall be carried with approved hard material and compacted in layers not exceeding 150 mm loose depth and systematically compacted by at least 8 passes of a towed vibrating roller weighing not less than 5 tonnes dead weight or in thickness that shall not exceed the maximum that the equipment and method of operation can process to meet the required compaction as directed by the Engineer. During compaction the surface of the layer shall be watered as necessary to facilitate the filling of the voids with the blinding material.

The Contractor shall first reshape the eroded ditch gullies to suitable shapes for working, remove any unsuitable materials, supply, dump, spread and process and compact in accordance with Section 508 of the Standard Specifications or as instructed by the engineer.

Work Method: **LB-MB**

Quality Control:

The Engineer shall approve and measure the volume of the hard materials, the compaction achieved of each layer and the gradient of the out fall to avoid further erosion.

Measurement Unit: m^3

The measurement shall be the volume of the hard material excavated, transported and deposited to fill the ditch gullies to the desired level.

Payment:

The unit rate shall be the full compensation for all labour, materials, tools, equipment and incidental costs required to complete the work.

08-50-005: Ditch/Mitre Drains/Catch water Drains

The Contractor shall excavate side drains, mitre drains and catch water drains to the dimensions shown on the Drawings and at locations as directed by the Engineer. They shall be excavated in a manner to minimise erosion at the discharge point. The material excavated from the drains shall be used to form the side drain bund directing water to the mitre-drain, and a bund on the lower side of the cut-off drain, or used for forming camber or disposed of as directed by the Engineer.

This activity shall be carried out either as Machine Based, Labour Based or a mixture of the two as defined in the Bills of Quantity or as instructed by the Engineer.

Work Method: **LB, MB, LB-MB**

Quality Control

- The longitudinal profile shall have a gradient of maximum 4%.
- The dimensions of the drains shall have maximum tolerances of $\pm$20mm
- The location of the drains shall be approved by the Engineer.

Measurement Unit: m^3

The measurement shall be the volume of material excavated as measured on site in approved drains.

Payment

The unit rate shall be full compensation for labour, tools, equipment and incidental costs required for carrying out the work.

08-60-001/005: Culvert Cleaning (partially blocked)

08-60-001 300mm dia
08-60-002 450mm dia
08-60-003 600mm dia
08-60-004 900mm dia
08-60-005 1200 mm dia

This activity involves the cleaning of culverts of specified sizes including pipe barrels, the outlet/inlet structures, and the outlet drains, keeping them free of all debris, weed, silt and any obstruction to ensure free passage of water at all times. The debris shall be deposited in approved spoil dumps as directed by the Engineer

Partially blocked culverts shall be those with less than half of the barrel blocked.

Correct widths and slopes of the outlet drains shall be maintained. The gradient of the outlet drain shall be not less than 2 %.

All broken culvert barrels discovered in the course carrying out this activity shall be reported to the Engineer.

This activity shall be carried out before the rains, or as directed by the Engineer.

The Contractor shall use **Labour** to carry out this item of work

Work Method: **LB**

Quality Control

The culverts shall be checked as free of debris to the satisfaction of the Engineer.

Measurement Unit: **m**

The measurement shall be the length of culvert, including the outlet drain, cleaned

Payment

The unit rate shall be full compensation for labour, tools and incidental costs required to carry out the work.

08-60-006/7/8/9/10: Culvert Cleaning (Fully blocked):

08 - 60 - 006 300mm dia;
08 - 60 - 007 450mm dia;
08 - 60 - 008 600mm dia;
08 - 60 - 009 900mm dia;
08 - 60 - 010 1200mm dia

This activity involves the cleaning of culverts of specified sizes including pipe barrels, the outlet/inlet structures, and the outlet drains, keeping them free of all debris, weed, silt and any obstruction to ensure free passage of water at all times. The debris shall be deposited in approved spoil dumps as directed by the Engineer

Fully blocked culvert shall be those with greater than half of the barrel blocked.

Correct widths and slopes of the outlet drains shall be maintained. The gradient of the outlet drain shall be not less than 2 %.

All broken culvert barrels discovered in the course of carrying out this activity shall be reported to the Engineer.

This activity should be carried out before the onset of the rains, or as directed by the Engineer.

The Contractor shall use **Labour** to carry out this item of work.

Work Method: **LB**

Quality Control

The culverts shall be checked as free from debris, to the satisfaction of the Engineer.

Measurement Unit: m

The measurement shall be the length of culvert, including the outlet drain cleaned.

Payment

The unit rate shall be full compensation for labour, tools and incidental costs required to carry out the work.

08-60-016
08-60-021/029 Supply and Installation of Concrete Pipe Culverts

08-60-016	**300**	**mm**	**unhaunched**
08-60-021	**300**	**mm**	**surrounds**
08-60-022	**450**	**mm**	**unhaunched**
08-60-023	**450**	**mm**	**surrounds**
08-60-024	**600**	**mm**	**unhaunched**
08-60-025	**600**	**mm**	**surrounds**
08-60-026	**900**	**mm**	**unhaunched**
08-60-027	**900**	**mm**	**surrounds**
08-60-028	**1200**	**mm**	**unhaunched**
08-60-029	**1200**	**mm**	**surrounds**

The Contractor shall supply, lay and join concrete pipes to form culverts, including the concrete bedding; haunching or surrounds; and backfilling, in accordance with the Drawings for the Type and diameter specified in the Contract or directed by the Engineer.

The pipes shall be of Class 20/20 concrete, at least 28 days cured, and manufactured on site or procured from a supplier approved by the Engineer and preferably ogee jointed. The pipes shall be laid on a bedding of Class 15/20 concrete of dimensions as shown on the Drawings and jointed with cement mortar 1:4.

The culvert gradient including the outlet shall be a minimum 2%.

The pipes shall be surrounded with Class 15/20 concrete to the dimensions shown on the Drawings or as directed by the Engineer.

Backfilling shall be carried with approved material and compacted in layers not exceeding 150 mm loose depth and placed evenly on each side of the pipe. Ramps shall be shaped to achieve a minimum overfill of 75% of the pipe diameter, and shall be tapered back on the carriageway to provide a gradual approach, as directed by the Engineer.

If the Contractor wishes to construct culverts on site, using inflatable or collapsible forms the Engineer's approval shall first be sought for the proposed working method.

On completion the inside of the culvert shall be smooth, without displaced joints or other obstructions and true to line and level.

The Contractor shall use **Labour** and appropriate compaction **Equipment** to carry out this item work

Work Method: **LM-MB**

Quality Control

- Concrete quality shall be checked for cracks, honey combing, and other defects.
- Before the pipes are laid, the gradient of the concrete bedding shall be checked and shall not be less than 2%
- The joints shall be checked to see that they have been properly made.

Measurement Unit: m

The measurement shall be in linear metres of the installed Type and size of culvert specified, measured net according to the Drawings.

Payment

The unit rate shall be the full compensation for labour, tools, materials, equipment and any other incidentals that may be required in carrying out the work.

08- 60-017 Head Wall Repair - Masonry

This activity involves the repairs to damaged head walls and wing walls built in masonry.

Where directed by the Engineer, the masonry walls shall be inspected and loose or missing stone re-secured or replaced. Damaged pointing shall be repaired with cement mortar 1:4 and finished flush with the stonework.

The Contractor shall use **Labour** to carry out this item of work

Work Method: **LB**

Quality Control

The stability of the walls and the pointing shall be to the satisfaction of the Engineer.

Measurement Unit: No

The measurement shall be the number of walls repaired as directed by the Engineer.

Payment

The unit rate shall be full compensation for labour, materials, tools, and incidental costs required to carry out the work.

08-60-018 Headwall Repair - Concrete

The activity involves the repairs to damaged concrete headwalls and wing walls, and to inlet/outlet concrete aprons. Concrete walls shall be inspected and repair works carried out as instructed by the Engineer to include breaking out and replacement of damaged concrete with similar material, and the rendering of open texture areas with cement mortar 1:4. Broken wall sections shall be re-built in 20/20 (1:2:4) concrete within formwork erected on the correct lines and levels in accordance with the Standard Drawings. Areas of new concrete and mortar shall be protected from direct sunlight and kept moist for 3 days.

The Contractor shall use **Labour** to carry out this item of work

Work Method: **LB**

Quality Control

The work shall be carried out to the satisfaction of the Engineer.

Measurement Unit: No

The measurement shall be the number of walls/aprons repaired.

Payment

The unit shall be full compensation for labour, materials, tools, and incidental costs required to carry out the work.

08-60-019 Headwall Construction - Masonry

The Contractor shall construct inlet and outlet structures for culverts including headwalls, wingwalls in stone masonry or concrete block, and aprons in concrete to the dimensions and levels shown on the Drawings (Types 1 to 4) as directed by the Engineer. The walls shall be built on foundations of class 15/20 concrete and jointed with cement mortar 1:4. The aprons shall be in Class 20/20 concrete and after laying the surface shall be kept moist for 3 days.

The Contractor shall use **Labour** to carry out this item.

Work Method: **LB-MB**

Quality Control

- The dimensions of the structures shall have a tolerance of ±10mm
- The levels shall have a tolerance of ±10mm
- The mortar joints shall be finished flush with the face of the walls.

Measurement Unit: m^3

The measurement shall be the volume of the structures constructed, in whichever material, measured net according to the Drawings.

Payment

The unit rate shall be the full compensation for labour, tools, materials and any other incidentals that may be required in carrying out the work.

08-60-020 Headwall Construction – Concrete

The Contractor shall construct inlet and outlet structures for culverts in concrete to the dimensions and levels shown on the Drawings (Type 1 to 4) as directed by the Engineer.

Concrete shall be Class 20/20 unless otherwise specified. The formwork for the walls shall be erected on the concrete foundations, to the correct dimensions, and shall be approved by the Engineer before concrete is poured. Concrete shall be poured in a single lift and the top surface shall be kept moist for 3 days. Formwork may be struck after 2 days or as directed by the Engineer.

The Contractor shall use a concrete vibrator or other means approved by the Engineer to ensure full compaction of the concrete.

The Contractor shall use both **Labour** and appropriate **Equipment** to carry out this item.

Work Method: **LM-MB**

Quality Control

- The dimensions of the structures shall have a maximum tolerance of + 20mm / - 10mm
- The workability and mix of concrete shall be checked using the slump test and shall have a slump limit as directed by the Engineer. The frequency of testing shall be determined by the Engineer
- The concrete shall be checked for cracks, honey combing and other defects at the time of striking the formwork.

Measurement Unit: m^3

The measurement shall be the volume of concrete in the completed structure, measured net in accordance with the Drawings.

Payment

The unit rate shall be the full compensation for labour, tools, materials, formwork, equipment and other incidentals that may be required in carrying out the work.

08-60-030 Excavate in soft material for culverts
08-60-031 Excavate in hard, material for culverts
08-60-032 Provide, lay and join 450mm inner dia. Concrete pipes
08-60-033 Provide, lay and join 600mm inner dia. Concrete pipes
08-60-034 Provide, lay and join 900mm inner dia. Concrete pipes
08-60-035 Provide, compact class 15/20 concrete
08-60-036 Provide, compact class 20/25 concrete
08-60-037 Provide and place A142 fabric mesh reinforcement
08-60-038 Selected backfill materials

These activities should be done in accordance with Bill 8, sub clauses 8.01 to 8.20 in the Standard Specifications for Roads and Bridges 1986.

The Contractor shall use both **Labour** and appropriate **Equipment** to carry out this item.

Work Method: **LM-MB**

Quality Control

- The workability and mix of concrete for the classes 15/20 and 20/25 shall be checked using the slump test and shall have a slump limit as directed by the Engineer.
- The laying and joining of the culverts shall be subject to the approval of the engineer.

Measurement Unit: m

The measurement shall be the length of culvert laid.

Payment

The unit rate shall be the full compensation for labour, tools, materials, formwork, equipment and other incidentals that may be required in carrying out the work.

08-70-004: Gabion Installation

The Contractor shall provide and install Gabions as retaining walls and anti-erosion structures at locations shown on the Drawings or as directed by the Engineer.

Gabions shall include mattresses and boxes and for purposes of construction, measurement and payment, no distinction shall be made between them.

Gabions shall be 'Maccaferi" boxes or 'Reno' matresses or equivalent approved by the Engineer.

The surfaces on which the Gabions are to be laid prior to being filled with rock shall be levelled to the depths and dimensions shown on the Drawings or as directed by the Engineer.

Gabion boxes shall be tied together with 3 mm galvanised binding wire securing all edges at 150mm intervals.

The Contractor shall use **Labour** to carry out this item.

Work Method: **LB**

Quality Control

The placing and tying of the Gabions shall be approved by the Engineer before filling commences.

Measurement Unit: No

The measurement shall be the number of Gabion boxes installed.

Payment

The unit rate shall be the full compensation for labour, materials, and any incidental item costs necessary to carry out the work.

08-70-005: Rock fill to Gabions

The Contractor shall provide selected rock, crushed if necessary, and carry out the packing and compacting of the rock inside the Gabion boxes.

The boxes shall be filled in layers from the sides towards the middle in an interlocking stone matrix to prevent deformation and bulging. The interior and top layers of the boxes shall be hand packed with smaller stone to form a tightly compact structure and rammed in place. Care shall be taken to ensure that each layer of boxes is filled evenly and to a level surface before the next course of boxes is placed.

The Contractor shall use a combination of **Labour** and transport **Equipment** to carry out this activity.

Work method: **LB-MB**

Quality Control

The filling and compaction of the stones in the Gabion boxes shall be approved by the Engineer.

Measurement Unit m^3

Rock fill to Gabions shall be the volume of Gabions filled.

Payment

The unit rate shall be the full compensation for labour, tools, materials and incidental costs required for carrying out the work.

08-70-006: Construction of Scour Checks (Concrete)
08-70-007: Construction of Scour Checks (Masonry)
08-70-008: Construction of Scour Checks (Wooden Stakes)

The Contractor shall construct scour checks using either stones, wooden stakes, or concrete as instructed by the Engineer.

Construction of concrete scour checks shall be in class 20/20 concrete, unless otherwise specified, and to the details shown in the Drawings.

Spacing for scour checks shall be as shown in Table 8.1, or as directed by the Engineer.

Table 8.1 : Scour checks spacing

Gradient of Drain	Scour Check Spacing	Gradient of Drain	Scour Check Spacing
4% or less	not required	8%	7.5m
5%	20m	9%	6m
6%	15m	10%	5m
7%	10m	>10%	4m

The Contractor shall use **Labour** to carry out this item.

Work method: **LB**

Quality Control

The spacing of the scour checks shall have a tolerance of ± 0.5m
The sizes of the wooden stakes and stones used shall be in accordance with the Drawings
The shape of the scour check shall be checked using the scour check template.

Measurement Unit: No.

The measurement shall be the **number** of scour checks constructed.

Payment

The unit rate shall be full compensation, for labour, tools, materials and incidental costs required for carrying out the work.

FIGURE C.7 - CULVERT ENTRY / EXIT STRUCTURE TYPES

TYPE 1 (ENTRY AND EXIT)

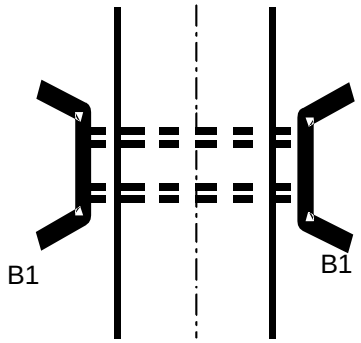

TYPE 3 (ENTRY AND EXIT)

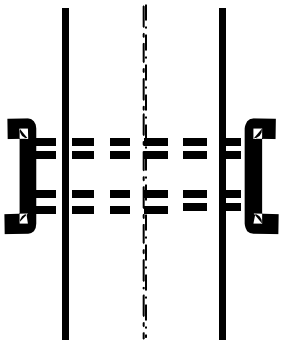

TYPE 2 (ENTRY ONLY!)

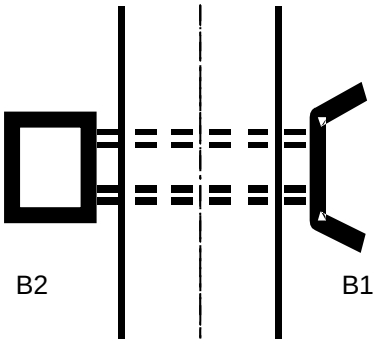

TYPE 4 (ENTRY AND EXIT ON ACCESS)

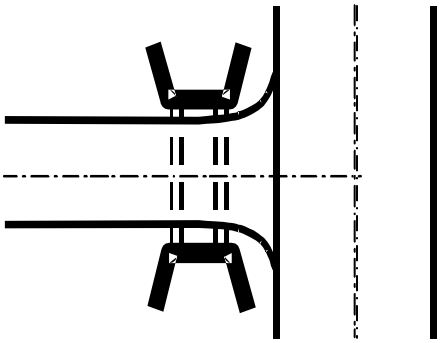

NOTE:

Coding system has been used in describing the standardised designs of the various culvert entry and exit structures. The code names consist of a number to specify shape and function as elaborated in above while the used construction materials are identified through an alphabetic symbol as follows:

A = Concrete block
B = Stone masonry
C = Dressed stones

An example code of "B2" would therefore stand for a drop inlet type structure to be built in stone masonry.

FIGURE C.8 - HEADWALL TYPE 1 (HEAD AND WINGW ALLS)

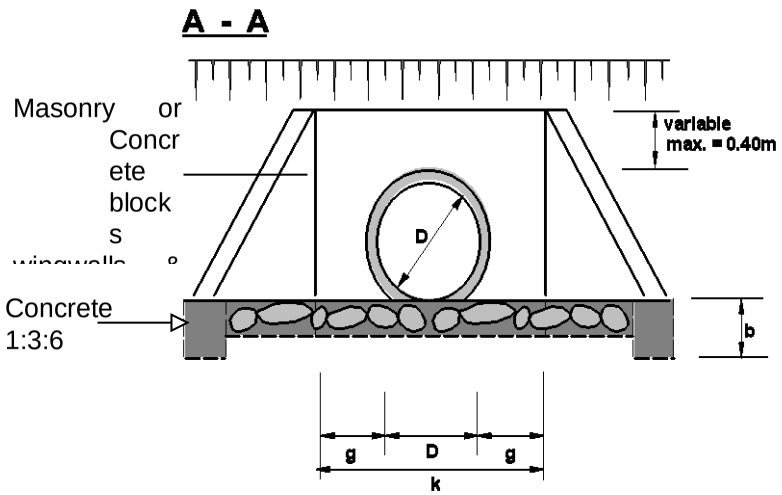

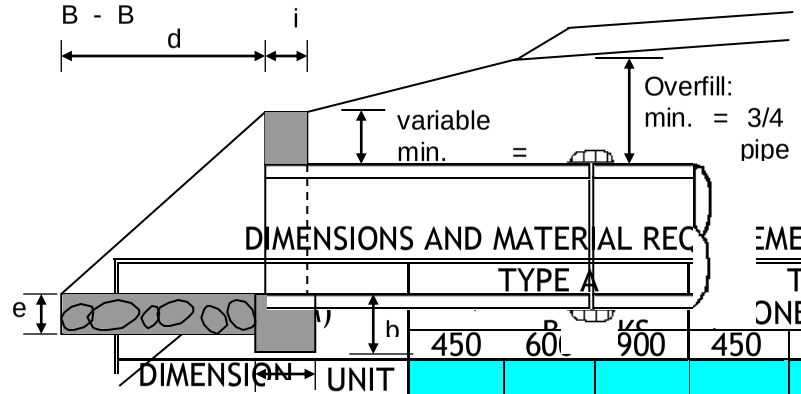

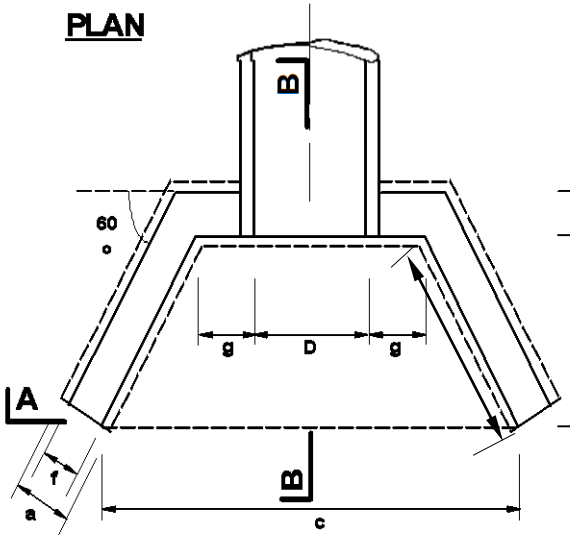

DIMENSIONS AND MATERIAL REQUIREMENTS

DIMENSION		UNIT	TYPE A 450	TYPE A 600	TYPE A 900	TYPE B 450	TYPE B 600	TYPE B 900
	FOUNDATION	m	0.30	0.30	0.30	0.40	0.40	0.60
	FOUNDATION	m	0.30	0.30	0.40	0.30	0.30	0.40
	FOUNDATION		2.20	2.35	2.89	2.20	2.35	2.89
d	APRON	m	1.00	1.00	1.20	1.00	1.00	1.20
e	APRON	m	0.20	0.20	0.20	0.20	0.20	0.20
f	WALL	m	0.20	0.20	0.20	0.40	0.40	0.40
g	WALL	m	0.30	0.30	0.30	0.30	0.30	0.30
h	WALL	m	1.15	1.15	1.39	1.15	1.15	1.39
l	WALL	m	0.20	0.20	0.20	0.40	0.40	0.40
k	APRON	m	1.05	1.20	1.50	1.05	1.20	1.50
MATERIAL REQUIREMENT								
	FOUNDATION (Concrete)		0.3	0.32	0.51	0.4	0.42	1.03
	LS nry)		0.4	0.47	0.67	0.8	0.93	1.35
	APRON (Concrete)		0.33	0.36	0.53	0.33	0.36	0.53

CULVERT PIPES

X-SECTION WIDT	No. of Pipes
4.50	6.00
5.50	7.00
6.50	8.00

FIGURE C.10 - HEADWALL TYPE 3A (CONCRETE BLOCK HEADWALLS)

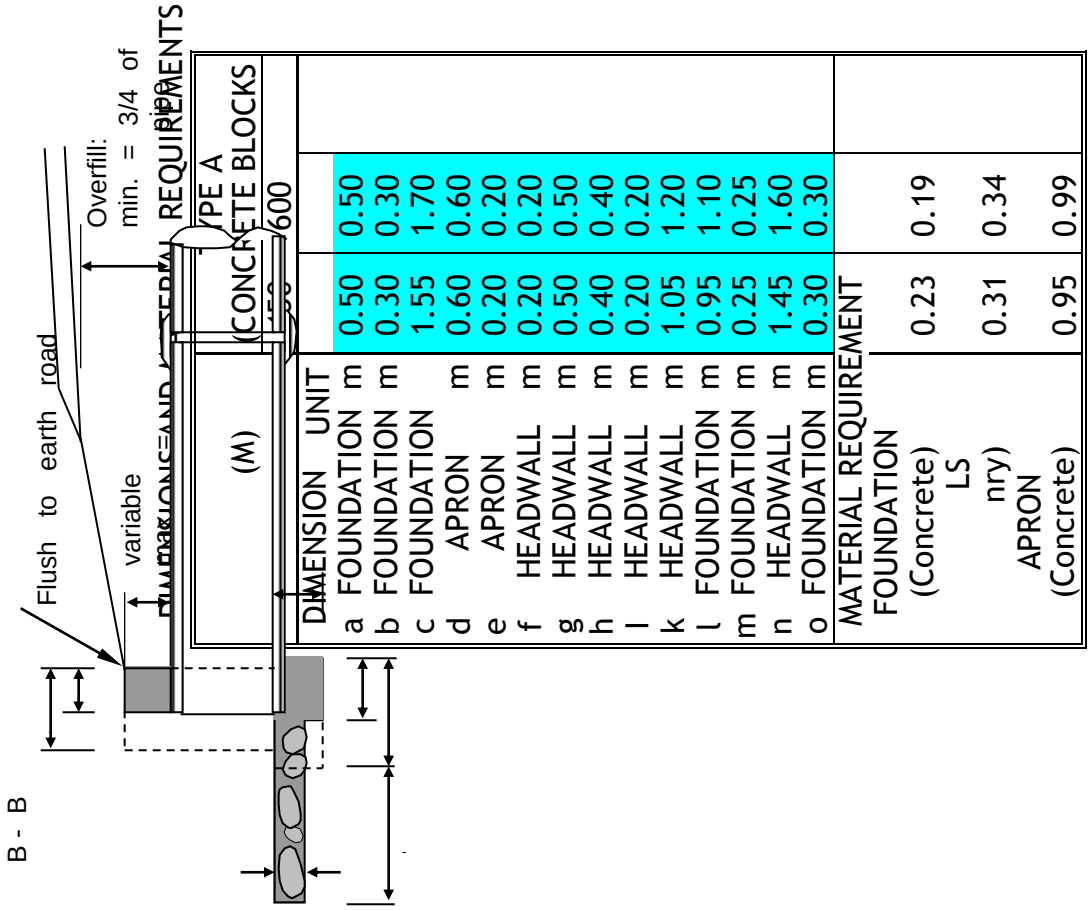

DIMENSIONS AND MATERIAL REQUIREMENTS (M)			
DIMENSION	UNIT		
a FOUNDATION	m	0.50	0.50
b FOUNDATION	m	0.30	0.30
c FOUNDATION	m	1.55	1.70
d APRON	m	0.60	0.60
e APRON	m	0.20	0.20
f HEADWALL	m	0.20	0.20
g HEADWALL	m	0.50	0.50
h HEADWALL	m	0.40	0.40
I HEADWALL	m	0.20	0.20
k HEADWALL	m	1.05	1.20
l FOUNDATION	m	0.95	1.10
m FOUNDATION	m	0.25	0.25
n HEADWALL	m	1.45	1.60
o FOUNDATION	m	0.30	0.30
MATERIAL REQUIREMENT			
FOUNDATION (Concrete)		0.23	0.19
LS nry)		0.31	0.34
APRON (Concrete)		0.95	0.99

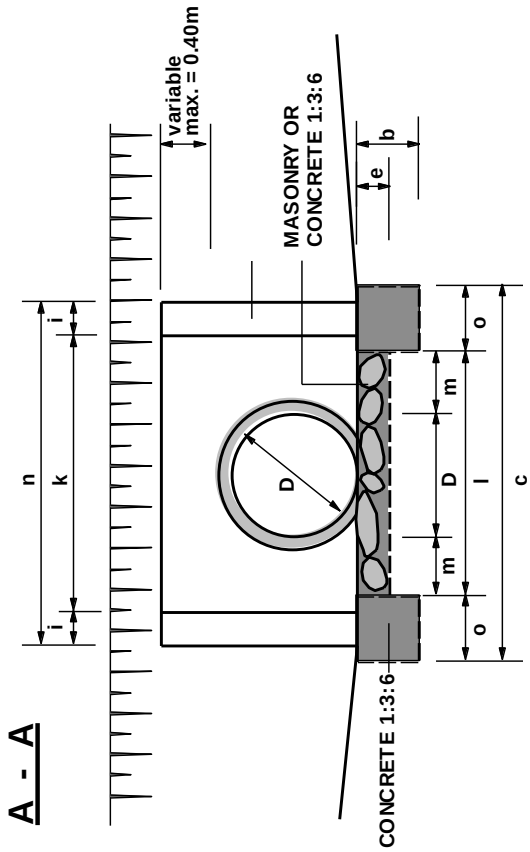

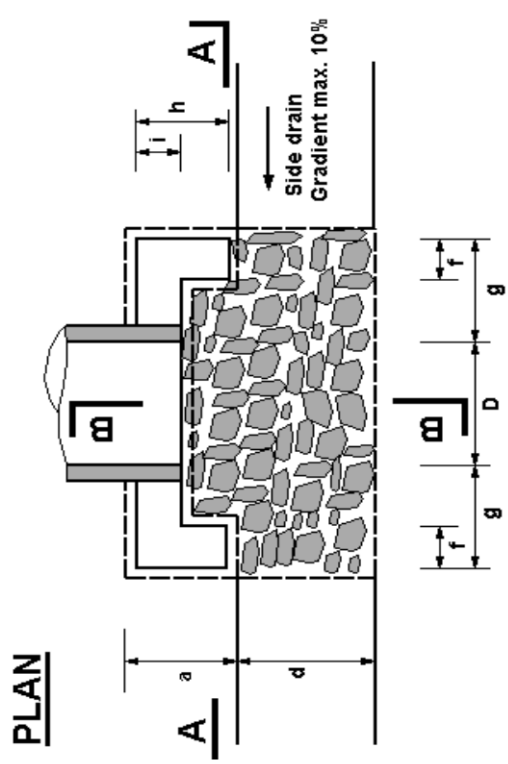

FIGURE C.12 - HEADWALL TYPE 4 (FOR ACCESS CULVERTS)

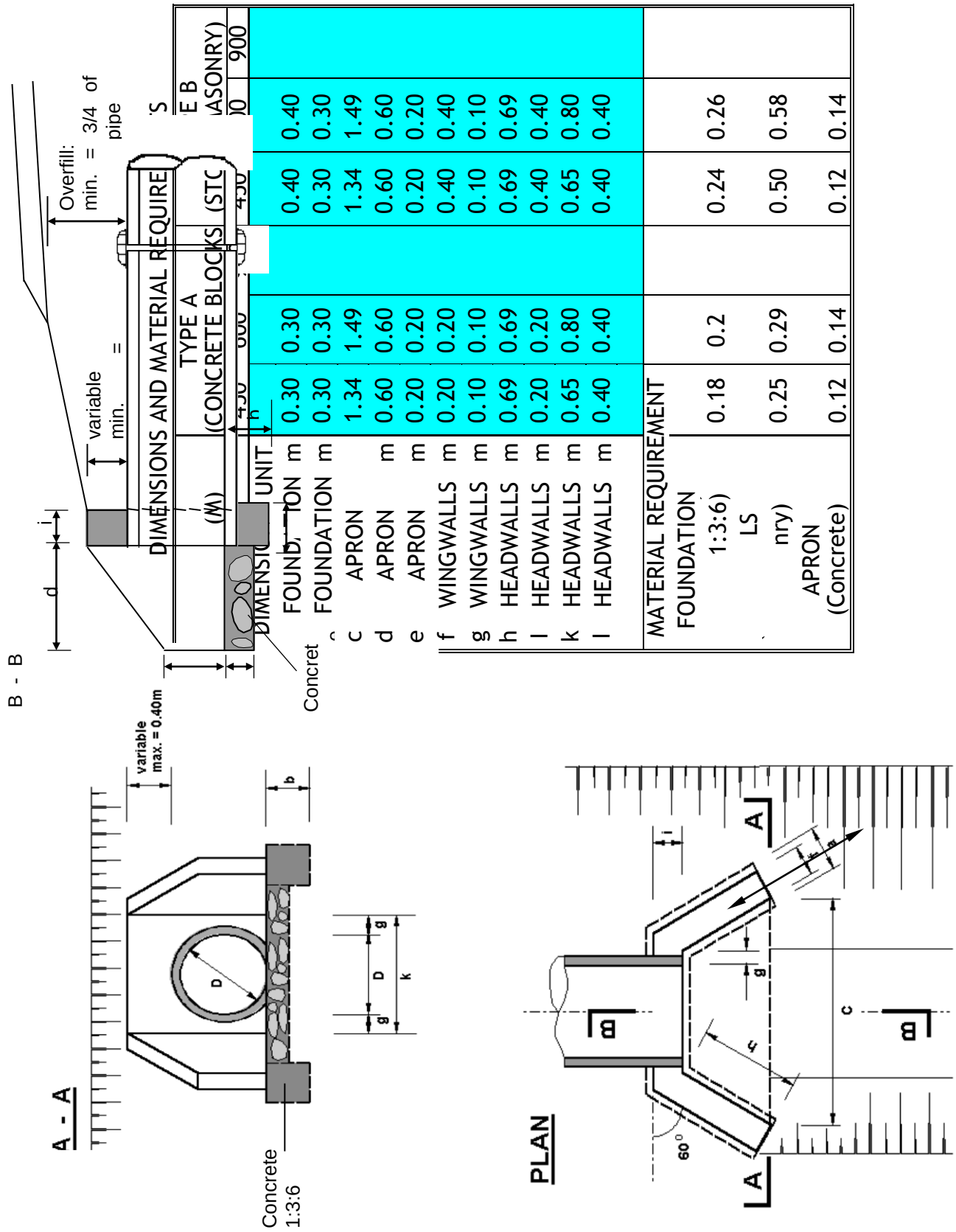

DIMENSIONS AND MATERIAL REQUIRE'S

(M)	TYPE A (CONCRETE BLOCKS)	TYPE B (MASONRY)
	450	900

DIMENSIONS	UNIT	TYPE A	TYPE B
FOUND. TION	m	0.30	0.40
FOUNDATION	m	0.30	0.30
c APRON		1.34	1.49
d APRON	m	0.60	0.60
e APRON	m	0.20	0.20
f WINGWALLS	m	0.20	0.40
g WINGWALLS	m	0.10	0.10
h HEADWALLS	m	0.69	0.69
I HEADWALLS	m	0.20	0.40
k HEADWALLS	m	0.65	0.80
l HEADWALLS	m	0.40	0.40

MATERIAL REQUIREMENT	TYPE A	TYPE B
FOUNDATION 1:3:6)	0.18 0.2	0.24 0.26
LS nry)	0.25 0.29	0.50 0.58
APRON (Concrete)	0.12 0.14	0.12 0.14

FIGURE C.14 - BEDDING AND HAUNCH PROFILES TYPES III & IV

BILL 10: GRADING AND GRAVELLING

Scope:

Grading covers the work of reinstating the road carriageway to the correct camber by removing the high points and filling gullies, corrugations, and wheel ruts to restore a smooth running surface.

Grading can either be done by labour (Manual Reshaping) or by Machine (Motorized grading or towed grading).

Manual reshaping is preferable where there is sufficient labour. For existing roads with side drains light manual reshaping should be used as defined in 10-50-004. Heavy manual reshaping should be used for roads that have deteriorated to such an extent that the drains and carriageway need

Diameter (D)	450 (mm)	600 (mm)	900 (mm)
	Dimensions in (m)		
a	0.15	0.2	0.2
b	0.1	0.15	0.15
c	0.86	1.12	1.48
d	0.56	0.72	1.08
e	0.42	0.54	0.81
f (min.)	0.23	0.3	0.45
g	-	-	-
h	0.52	0.69	0.96
i	-	-	-
Concrete	Volume in (m3/m)		
	0.26	0.47	0.71
Application	- Fair subgrade condition; - Overfill > ¾ Diameter; - Seasonal waterflow only.		
Remarks	- Use gravel material for back/ overfill.		

450 (mm)	600 (mm)	900 (mm)
Dimensions in (m)		
0.15	0.2	0.2
0.1	0.15	0.15
0.86	1.12	1.48
0.56	0.72	1.08
0.46	0.52	0.78
0.15	0.15	0.15
0.15	0.15	0.15
0.81	1.02	1.38
0.28	0.35	0.45
Volume in (m3/m)		
0.37	0.61	0.92
- Fair to poor subgrade Condition; - Overfill > ¾ Diameter; - Seasonal waterflow only.		
- Use gravel material for back/ overfill.		

to be re-instated. Heavy Manual Reshaping is defined under Bill 5 – Earth Works.

Light grading is carried out on good and fair roads as a maintenance activity while heavy grading is for re-establishing a road in poor or very poor condition.

Gravelling consists of the excavation; loading, hauling, dumping, spreading and compacting using approved equipment of gravel wearing course material on the formation of the road carriageway. Gravel shall include lateritic gravel, quartzitic gravel, calcareous gravel, decomposed rock, soft stone coral rag, clayey sand and crushed rock.

The material may be obtained from quarries, borrow pits or excavation in cuttings as directed by the Engineer. Gravel material shall conform to the requirement given in Table 10.1

Table 10.1: Requirement for Gravel Wearing Course

GRADING REQUIREMENTS	
Sieve (mm)	% by Weight Passing
40	100
28	95 – 100
20	85 – 100
14	65 – 100
10	55 – 100
5	35 – 92
2	23 – 77
1	18 – 62

PLASTICITY INDEX REQUIREMENTS PI		
Zone	Min	Max
WET: Mean annual rainfall	5	20
DRY: Mean annual rainfall	10	30

BEARING STRENGTH REQUIREMENTS		
Traffic VPD	CBR	DCP Equivalen

0.425	14 – 50
0.075	10 – 40

For "Quarry Waste" gravel stones of maximum dimension 80mm may be permitted

		mm/Blow
>15	20	11
<15	15	14
CBR at 95 % MDD, Modified AASHTO and 4 days soaking		
Lower quality material (CBR 15) may be accepted if no better material can be found		

The Engineer shall approve quarries and the extent of their exploitation. The possible quarries shall be shown to the Contractor prior to commencement of the Works. The Contractor shall be responsible for the acquisition of the quarry rights and shall conduct respective negotiations with landowners and affected communities.

Alternative sources of gravel material whose quality can be shown to be in compliance with the specification requirements may be used, with the approval of the Engineer. The Contractor is deemed to have included in his rates for the provision of the gravel material.

10-50-001: Heavy Grading without watering and compaction.

Heavy grading without watering and compaction shall only be done when there is sufficient moisture in the material and the material can be compacted by traffic.

The Contractor shall scarify the existing carriageway surface, cutting high spots and moving materials to fill potholes, corrugations and wheel ruts and reshape the surface to the specified camber, using a Motor grader unless otherwise directed by the Engineer. All loose rocks, roots and grasses shall be removed first and disposed of well clear of the drains.

Pegs 300 to 400mm long shall be placed at 20 m intervals to mark edge of the carriageway.

The material shall be graded toward the centre of the road starting from both edges until the specified camber is achieved. Suitable material from the side drains may be used as additional material. Any further material needed to achieve the correct camber shall be from an approved source.

No grading shall be carried out in dry conditions.

The Contractor shall use **Equipment** to carry out this item.

Work Method: **MB**

Quality Control

- The width of the carriageway shall be checked at every 50m intervals and have a tolerance of + 50mm or -20mm.

- The camber shall be checked with a camber board at 25m intervals and shall have a tolerance of ± 1%

Measurement Unit: m^2

The measurement shall be the area of carriageway graded, measured net according to the specified width and measured length graded.

Payment

The unit rate shall be the full compensation for labour, tools, equipment and incidental costs required for carrying out the work.

10-50- 004: Carriageway Grading - Light Grading

Light grading shall only be done when there is sufficient moisture in the material. The Contractor shall grade the carriageway to control roughness and corrugations using either a Towed or a Motor grader. The width of the carriageway shall be as specified for the Road Class.

Pegs 200 to 300mm long shall be placed at 20 m intervals to mark edge of the carriageway

The material shall be bladed toward the centre of the road, starting from both edges, to the specified camber. Where instructed by the Engineer, suitable materials from the side drains may be used to fill potholes and gullies in the carriageway. Any further material needed to re-form the camber shall be from an approved source. Compaction shall be achieved

using the wheels of the equipment, tracked evenly over the full surface, or by other approved means.

No grading shall be carried out in dry conditions.

The Contractor shall use **Equipment** to carry out this item.

Work Method: **MB**

Quality Control

- The width of the carriageway shall be checked at every 50m intervals and have a tolerance of +50mm or -20mm

- The camber shall be checked with a camber board at 25m intervals and shall have a tolerance of ± 1%
- Longitudinal levels shall be checked with a straight edge of minimum 2.7 m length. Maximum tolerance of ±10 mm.

Measurement Unit: m^2

The measurement shall be the area of carriageway graded, measured net according to the specified width and measured length graded.

Payment

The unit rate shall be the full compensation for labour, tools, equipment and incidental costs required for carrying out the work.

FIGURE C.1 - CROSS SECTION A (MINOR STANDARD CROSS-SECTION)

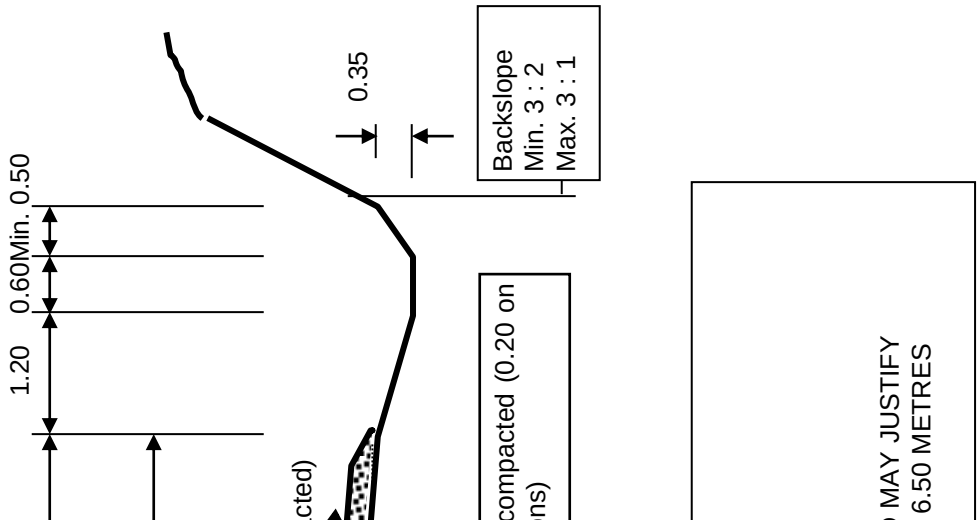

FIGURE C.2 - CROSS SECTION B (REDUCED CROSS-SECTION)

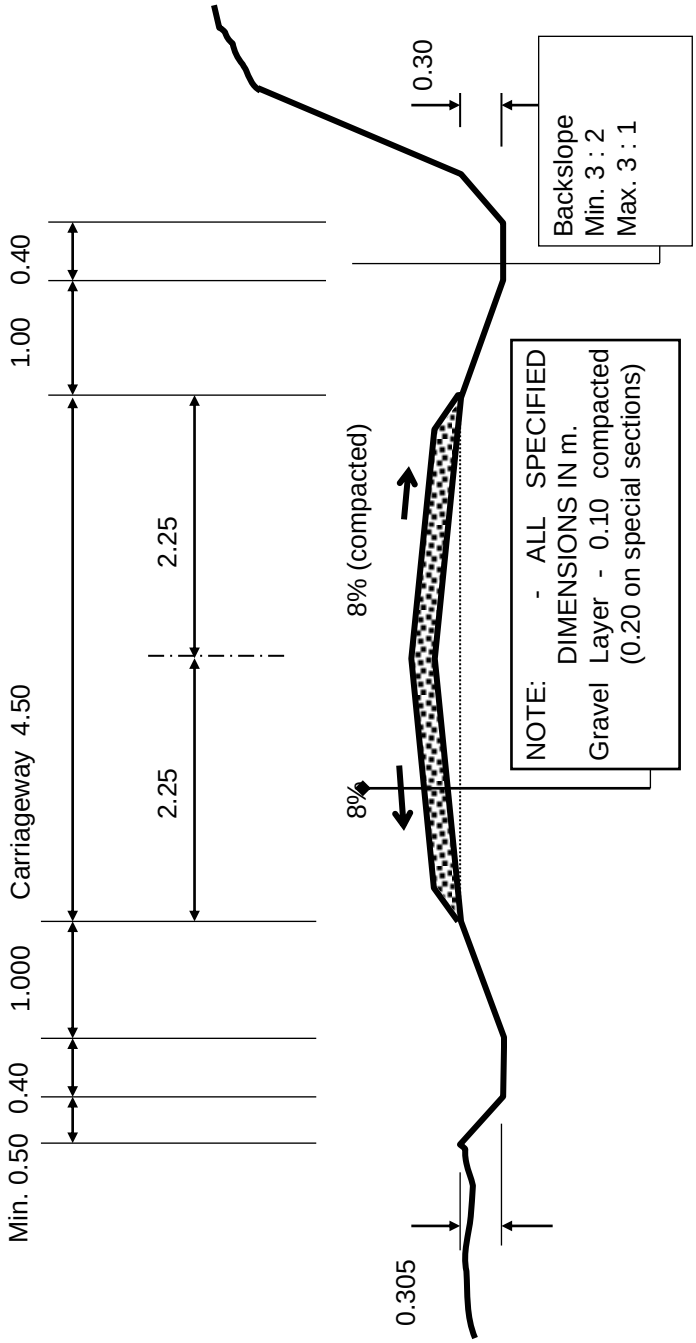

BILL 22: DAYWORKS

ITEMS 22-50-001 to 22-79-018 are for the Schedule of Rates. The Engineer will include the relevant items for each specific contract document.

A Provisional Sum shall be included in the Bills of Quantities to cover the payment of equipment, labour and materials for work instructed by the Engineer on a Dayworks basis.

The Contractor shall include prices for all items in the Schedule of Rates, in the Dayworks Bill, and shall carry out work using these rates only if directed by the Engineer.

Measurement and Payment

a. Equipment:

Payment for equipment shall only be made for the time each item of equipment is working. Idle time due to breakdown or incompleteness of the equipment shall not be paid. The rate of equipment shall include for the cost of the following:-

i. Transport of the equipment to the site
ii. Operators , drivers and assistants including their overtime
iii. Fuels and lubricants
iv. Maintenance, spare parts and all costs of repairs
v. Depreciation, insurance, overheads and profits.

b. Labour

Payment shall only be made for the time each of worker working on the Dayworks as instructed by the Engineer. The rate for labour shall include the cost of,

i. All wages, allowances and other payments due to the worker
ii. Provision of small tools used on Dayworks activities by labourers and tradesmen.
iii. Insurance, overheads and profit.

c. Materials

Payment shall only be made for materials instructed by the Engineer for use in Dayworks activities. The rate for materials shall include for the cost of provision of the material, transport to site, storage, handling, overheads and profits.

Schedule of Dayworks

The Engineer shall compile a Schedule of the Equipment, Labour and Materials which may apply to Dayworks activities, to be included in the Dayworks Bill.

BILL 25: HIV/AIDS AWARENESS AND PREVENTION CAMPAIGN

This BILL sets out the Contractor's obligations with regard to on-site HIV / AIDS awareness campaign and preventive measures that are to be instituted.

25-50-001 HIV / AIDS Awareness and Prevention Campaign

The Contractor shall institute an HIV / AIDS awareness and prevention campaign amongst his workers for the duration of the Contract. The awareness campaigns shall be carried out in consultation and guidance of Ministry of Public Health or Local service providers approved by the Ministry of Public Health.

The Contractor shall display AIDS awareness posters in all buildings frequented by workers employed on the Contract, where such buildings fall under the control of the Contractor.

In addition at least two of the Contractors vehicles regularly used on site shall display HIV / AIDS awareness posters. The posters shall be printed on gloss paper and shall be at least A1 size on buildings and A3 size or other approved size on vehicles.

Aids awareness shall also be included in the orientation process of all workers employed on the Contract.

As part of the campaign the Contractor will be required to make condoms available to his workers.

Payment:

The contractor shall include costs for carrying out AIDS awareness and prevetion campaign in his rates.

25-50-003 Baraza's for Cross-cutting Issues

The Contractor shall arrange and conduct meetings and/or training sessions for workers and staff on cross-cutting issues, including Community Participation, Environmental Mitigation, Gender Rights, HIV/AIDS, Workers Rights at times and locations directed by the Engineer.

3 PREAMBLE TO BILLS OF QUANTITIES

The Bills of Quantities form part of the Contract Documents and are to be read in conjunction with the instructions to Tenderers and these documents.

The prices and rates to be inserted in the Bill of Quantities are to be the full, inclusive value of the work described under the several items including all costs and expenses which may be required in and for the execution of the work described and for the Contractor's overheads and profits.

Each item in the B/Q contains only a brief description of the proposed work. Fuller details and directions of the work to be done, the materials to be used, the standards of workmanship, methods of measurement and payment are to be found in the various sections of the Specifications.

The Quantities set forth in the Bill of Quantities are estimated and representing substantially the work to be carried out. There is no guarantee to the Contractor that he will be required to carry out all the quantities of work indicated under any one particular item or group of items in the Bills of Quantities. The basis of payment shall be the Contractor's rates and the quantities of work actually done in fulfilment of his obligation under the Contract.

ROAD OPENING WORKS ATHWANA WARD

BILL OF QUANTITIES

Road name:**Mworoga- Maitha rd 3 km**
Kandebene –kaujurine-kibiru rd 5 km
Mweronkoro –lothera rd 1.8 KM

Bill of Quantities					Page: 1	
Bill No.1	**General: Office administration and overheads/Preliminaries**				**Project:**	
Item No.	**Description**	**Units**	**Quantity**	**Unit Bid Rate(Ksh)**	**Amount KSh**	**Technology**
01-60-005	Provide and erect publicity signboard as directed by the engineer		1	25,000	25,000	LB
	Total Carried Forward to Summary:				25,000	

Road name:**Mworoga- Maitha rd 3 km**
Kandebene –kaujurine-kibiru rd 5km
Mweronkoro –lothera rd 1.8 km

Bill of Quantities					Page: 2	
Bill No.22	**DAY WORKS.**				**Project:**	
Item No.	**Description**	**Units**	**Quantity**	**Unit Bid Rate(Ksh)**	**Amount KSh**	**Technology**
22-63-001	Crawler Dozer work with Dozer and hydraulic attachments. ; 136-185kw rated flywheel power.	Hours	265			MB
	Total Carried Forward to Summary:					

Bill of Quantities		Page: 3
	Summary	**Project:**
Item No.	**Description**	**Amount (KShs)**
1	GENERAL: OFFICE ADMINISTRATION AND OVERHEADS/PRELIMINARIES	
22	DAY WORKS	
	Sub Total	
	VAT inclusive	
	Total	
	Carried to page on the form of Tender	

STANDARD FORMS

(i)	**Form of Invitation for Tenders**
(ii)	**Letter of Acceptance**
(iii)	**Form of Tender Security**
(iv)	**Performance Bank Guarantee**
(v)	**Bank Guarantee for Advance Payment**
(vi)	**Tender Questionnaire**
(vii)	**Confidential Business Questionnaire**
(viii)	**Adjudicator's Agreement**

FORM OF INVITATION FOR TENDERS

_____*[date]*

To: _____ *[name of Contractor]*
_____*[address]*
_____
_____

Dear Sirs:

Reference:_____[Contract Name]

You are qualified to tender for the above Contract.

We hereby invite you and other qualified Tenderers to submit a Tender for the execution and completion of the Works.

A complete set of Tender documents may be purchased from ____
_____
____

[mailing address, cable/telex/facsimile numbers].

*Upon payment of a non-refundable fee of Kshs*_____

All Tenders shall be accompanied by .....number of copies of the same and a Tender Security in the form and amount of Kshs……. and shall be delivered to :

_____
____

[address and location]

at or before _____(time and date). *Tenders will be opened immediately thereafter, in the presence of those Tenderers' representatives who choose to attend.*

Please confirm receipt of this letter and your intention to Tender in writing.

Yours faithfully,

_____ *Authorised Signature*

_____ *Name and Title*

LETTER OF ACCEPTANCE
[letterhead paper of the Employer]

_____*[date]*

To: _____
[name of the Contractor]

_____
[address of the Contractor]

Dear Sir,

This is to notify you that your Tender dated _____
for the execution of _____
[name of the Contract and identification number,as given in the Tender documents] for the Contract Price of Kshs. _____ *[amount in figures]*[Kenya Shillings_____*(amount in words)*] in accordance with the Instructions to Tenderers is hereby accepted.

You are hereby instructed to proceed with the execution of the said Works in accordance with the Contract documents.

Authorized Signature ……

Name and Title of Signatory ……

Attachment :

FORM OF TENDER SECURITY

WHEREAS …….(hereinafter called "the Tenderer") has submitted a Tender dated …… for the Rehabilitation/Spot Improvement of ……
…… *(name of Contract)*

KNOW ALL PEOPLE by these presents that WE …… having our registered office at ……(hereinafter called "the Bank"), are bound unto ……(hereinafter called "the Employer") in the sum of Kshs.…… for which payment well and truly to be made to the said Employer, the Bank binds itself, its successors and assigns by these presents sealed with the Common Seal of the said Bank this ……. Day of ……20……

THE CONDITIONS of this obligation are:

1. If after Tender opening the Tenderer withdraws his Tender during the period of Tender validity specified in the Instructions to Tenderers

Or

2. If the Tenderer, having been notified of the acceptance of his Tender by the Employer during the Period of Tender validity:

   (a) fails or refuses to execute the Form of Agreement in accordance with the Instructions to Tenderers, if required; or

   (b) fails or refuses to furnish the Performance Security, in accordance with the Instructions to Tenderers;

We undertake to pay to the Employer up to the above amount upon receipt of his first written demand, without the Employer having to substantiate his demand, provided that in his demand the Employer will note that the amount claimed by him is due to him, owing to the occurrence of one or both of the two conditions, specifying the occurred condition or conditions.

This guarantee will remain in force up to and including thirty (30) days after the Period of Tender validity, and any demand in respect thereof should reach the Bank not later than the said date.

_____	_____
[date[	*[signature of the Bank]*
_____	_____
[witness]	*[seal]*

PERFORMANCE BANK GUARANTEE

To: _____(*Name of Employer*)
_____*(Date)*
_____(*Address of Employer)*

Dear Sir,

WHEREAS _____(hereinafter called "the Contractor") has undertaken, in pursuance of Contract No. _____ dated _____ to execute _____ (hereinafter called "the Works");

AND WHEREAS it has been stipulated by you in the said Contract that the Contractor shall furnish you with a Bank Guarantee by a recognised bank for the sum specified therein as security for compliance with his obligations in accordance with the Contract;

AND WHEREAS we have agreed to give the Contractor such a Bank Guarantee:

NOW THEREFORE we hereby affirm that we are the Guarantor and responsible to you, on behalf of the Contractor, up to a total of Kshs. _____ (*amount of Guarantee in figures*) Kenya Shillings_____ (*amount of Guarantee in words*), and we undertake to pay you, upon your first written demand and without cavil or argument, any sum or sums within the limits of Kenya Shillings _____ (*amount of Guarantee in words*) as aforesaid without your needing to prove or to show grounds or reasons for your demand for the sum specified therein.

We hereby waive the necessity of your demanding the said debt from the Contractor before presenting us with the demand.

We further agree that no change, addition or other modification of the terms of the Contract or of the Works to be performed thereunder or of any of the Contract documents which may be made between you and the Contractor shall in any way release us from any liability under this Guarantee, and we hereby waive notice of any change, addition, or modification.

This Guarantee shall be valid until the date of issue of the Employer's notice under Sub-Clause 8.2 (Taking-Over Notice), of the Conditions of Contract.

SIGNATURE AND SEAL OF THE GUARANTOR _____

Name of Bank _____

Address _____

Date _____

BANK GUARANTEE FOR ADVANCE PAYMENT

To: _____ *[name of Employer]* _____*(Date)*
_____*[address of Employer]*

Gentlemen,

Ref: _____*[name of Contract]*

In accordance with the provisions of the Conditions of Contract of the above-mentioned Contract, **We,**_____*[name and Address of Contractor]* (hereinafter called "the Contractor") shall furnish you with a Bank guarantee by a recognised Bank for the sum specified therein as a security for compliance with his obligations in accordance with the Contract in an amount of Kshs._____*[amount of Guarantee in figurers]* Kenya Shillings_____*[amount of Guarantee in words].*

We, the _____[*bank or financial institution*], as instructed by the Contractor, agree unconditionally and irrevocably to guarantee as primary obligator and not as Surety merely, the payment to _____[*name of Employer*] on his first demand without whatsoever right of objection on our part and without his first claim to the Contractor, in the amount not exceeding Kshs_____[*amount of Guarantee in figures*]Kenya Shillings _____[*amount of Guarantee in words*].

We further agree that no change or addition to or other modification of the terms of the Contract or of the Works to be performed thereunder or of any of the Contract documents which may be made between _____[*name of Employer*] and the Contractor, shall in any way release us from any liability under this Guarantee, and we hereby waive notice of any such change, addition or modification.

This Guarantee shall remain valid and in full effect from the date of the Advance Payment under the Contract until _____(*name of Employer*) receives full payment of the same amount from the Contract.

Yours faithfully,
Signature and Seal _____

Name of the Bank or financial institution _____

Address

_____

Date

_____

Witness: Name:

_____

Address:

_____

Signature:

_____

Date:

_____

Adjudicator's Agreement

Identification of Project:

……
(the "Project")

Name and address of the Employer:

……..
(the "Employer")

Name and address of the Contractor:

……..
(the "Contractor")

Name and address of the Adjudicator:

……..
(the "Adjudicator")

Whereas the Employer and the Contractor have entered into a Contract ("the Contract") for the execution of the Project and wish to appoint the Adjudicator to act as adjudicator in accordance with the Rules for Adjudication ["the Rules"].

The Employer, Contractor and Adjudicator agree as follows:

1. The Rules and dispute provisions of the Contract shall form part of this Agreement.

2. The Adjudicator shall be paid:

A retainer fee of ……..…….. per calendar month
(where applicable)

A daily fee of ……..…

Expenses (including the cost of telephone calls, courier charges, faxes and telexes incurred in connection with his duties; all reasonable and necessary travel expenses, hotel accommodation and subsistence and other direct travel expenses).

Receipts will be required for all expenses.

3. The Adjudicator agrees to act as Adjudicator in accordance with the Rules and has disclosed to the Parties any previous or existing relationship with the Parties or others concerned with the Project.

4. This Agreement shall be governed by the laws of……

5. The Language of this Agreement shall be ……..

SIGNED BY …….……

For and on behalf of the Employer in the presence of

Witness ……..
Name ……..
Address ……...
Date ……..

SIGNED BY …….……

For and on behalf of the Contractor in the presence of

Witness ……..
Name ……..
Address ……..
Date ……..

SIGNED BY ……

For and on behalf of the Adjudicator in the presence of

Witness ……..
Name ……..
Address ……..
Date ……..

QUALIFICATION INFORMATION

TENDER QUESTIONNAIRE

Please fill in block letters.

1. Full name of Tenderer;

……

2. Full address of Tenderer to which Tender correspondence is to be sent (unless an agent has been appointed below);

……

3. Telephone number (s) of Tenderer;

……

4. Facsimile of Tenderer;

……

5. Name of Tenderer's representative to be contacted on matters of the Tender during the Tender period;

……

6. Details of Tenderer's nominated agent (if any) to receive Tender notices (name, address, telephone, telefax);

……

……

_____

Signature of Tenderer

Make an original and one copy of the Tender documents

CONFIDENTIAL BUSINESS QUESTIONNAIRE

You are requested to give the particulars indicated in Part 1 and either Part 2 (a) or 2 (b) whichever applies to your type of business.

You are advised that it is a serious offence to give false information on this Form.

Part 1 – General

Business Name ……

Location of business premises; Country/Town…….

Plot No…… Street/Road ……

Postal Address…… Tel No……..

Nature of Business……..

Current Trade Licensee No…… Expiring date……

Maximum value of business which you can handle at any time: Kshs ……..

Name of your Bankers……

Branch……

Part 2 (a) – Sole Proprietor

Your name in full…… Age……

Nationality…… Country of Origin……

Citizenship details ……

Part 2 (b) – Partnership

Give details of partners as follows:

	Name in full	*Nationality*	*Citizenship Details*	*Shares*
1	……			
2	……			
3	……			

Part 2 (c) – Limited Company Give details of directors as follows:

	Name in full	*Nationality*	*Citizenship Details*	*Shares*
1	……			

2 .....
3 .....

1.1 KEY PERSONNEL

	DESIGNATION	NAME	NATIONALITY	SUMMARY OF QUALIFICATIONS AND EXPERIENCE
1				
2				
3				
4				
5				
6				

I certify that the above information is correct.

…… …… ……..
(Title) (Signature) (Date)

1.1.2 SCHEDULE OF COMPLETED WORKS CARRIED OUT BY THE TENDERER

	DESCRIPTION OF WORKS	NAME OF CLIENT	TOTALVALUE OF WORKS (KSHS)	CONTRACT PERIOD (YEAR)	YEAR COMPLETED
1					
2					
3					
4					
5					
6					
7					

I certify that the above Civil Works were successfully carried out and completed by ourselves.

…… …… ……

(Title) (Signature) (Date)

*Value in Kshs using Central Bank of Kenya mean exchange rate at a reference date 30 days before date of tender opening.

1.1.3 SCHEDULE OF ONGOING PROJECTS

	DESCRIPTION OF WORK	NAME OF CLIENT	CONTRACT PERIOD	DATE OF COMMEN-CEMENT	DATE OF COMPLETION	TOTAL VALUE OF WORKS (KSHS.)	PERCENTAGECOMPLETED TO DATE
1							
2							
3							
4							
5							
6							

I certify that the above Civil Works are being carried out by ourselves and that the above information is correct.

……	……	……
(Title)	*(Signature)*	*(Date)*

SCHEDULE OF EQUIPMENTS

Major items of Contractor's Equipment proposed for carrying out the Works. List all information requested below.

	Item of Equipment	Description, Make and age (years)	Condition(new, good, poor) and number available	Owned, leased (from whom?), or to be purchased (from whom?)
1				
2				
3				
4				
5				

I certify that the above information is correct.

……..…….. ……..……

……..……..

(Title) (Signature) (Date)

Instructions to the Tenderers

Table 1: Mandatory requirements

Item NO	Mandatory qualification Requirements	
1	ELIGIBILITY - Copy of National ID or passport for all Directors	mandatory
2	BID SECURITY - Unconditional guarantee, in the format and conditions provided - Must be valid for 150days	mandatory
3	Attending pre-tender site visit for the works.	mandatory
4	Certified Copy of Certificates of Registration/Incorporation.	mandatory
5	Principal place of business (attach business permit or trading license)	mandatory
6	Certified Certificate of registration with National Construction Authority	mandatory
7	Certified Copy of Tax compliance certificate	mandatory
8	Properly and dully filled Form of Tender	mandatory
9	Properly and dully filled Tender Questionnaire	mandatory
10	Properly and dully filled Confidential Business Questionnaire	mandatory

SECTION V-(B): TECHNICAL EVALUATION CRITERIA

This Section shall apply to tenderer whose bids have been determined to be responsive and have met all the Qualification Criteria as per the instruction to bidders.

It contains all the factors, methods and criteria that the Procurement Entity shall use for the technical evaluation. The information to be provided in relation to each factor and the definitions of the corresponding terms are included in the respective supplementary information Forms (Schedules).

The Technical Evaluation Committee shall examine tender documents and score them based on their validity, accuracy and quality and score them as per Table below. Where the bidder fails to meet the requirement, the bidder shall be disqualified.

Bidders whose shall **score70%** and above shall proceed to financial evaluation stage

Table 2: Technical Qualification Requirements

11		Financial Capacity	20
	1	**Company turnover for the last two years**	5
	2	**Profitability of the company for the last two years**	5
	3	Past two years Audited Financial Reports of the tenderer	5
	4	Current one year Bank statement.	5
12		Contractual misconducts and litigation - Legal Capacity/Litigation History (attach affidavit)	5
13		Experience (5 YEARS AND ABOVE)	25
		Bidder to submit the following - Completion certificate, Taking Over Certificate or Substantial Completion Certificate of relevant work in the previous 5 years - Value of ongoing work must be < 50% of	20
	A	Specific Experience in Related Works - Attach certificate of completion	5
14		Key personnel - Provide List of professional and technical staff and their resume - General Experience (CV), - Certified Qualification Certificate	15
	b	Site Agent DEGREE	15
	C	DIPLOMA	10
	c	CERTIFICATE	5
15	A	Equipments	20
		Bidder to submit the following - Ownership list of required equipment and/or Authorization letter of hiring from M&T or reputable hiring company	
16		**Registration as a contractor with NCA**	8

		1) NCA 1 [building/roads] 2) NCA 2 [building/roads] 3) NCA 3 [building/roads] 4) NCA 4 [building/roads] 5) NCA 5 [building/roads] 6) NCA 6 [building/roads] 7) NCA 7 [building/roads] 8) NCA 8 [building/roads]	8 7 6 5 4 3 2 1
17	a	Working Schedule and Projected CashFlow.	4
		Bidder to submit the following Proposals 1. Signed work program chart 2. Signed Cash flow plan during the Contract period.	 2 2
18		**Certification** I/we certify that the information provided herein is correct and legally binding. Name..... Signature..... Date..... Official stamp.....	3
		TOTAL	100 %