COUNTY GOVERNMENT OF MERU

DEPARTMENT OF ROADS, TRANSPORT AND ENERGY

(KDSP)

TENDER NUMBER: CGM/ONT/092/2019-2020

NEGOTIATION NO:764485

ROAD NAME: **UPGRADING OF NKUBU MKT TO PAVED STANDARDS IN NKUENE WARD**

BID DOCUMENT FOR SPOT IMPROVEMENT

- INVITATION FOR TENDERS
- INSTRUCTIONS TO BIDDERS
- QUALIFICATION CRITERIA
- CONDITIONS OF CONTRACT
- APPENDIX TO FORM OF TENDER
- STANDARD FORMS
- SPECIFICATIONS, DRAWINGS AND BILLS OF QUANTITIES

DEC. 2019

The Engineer	The Employer
CHIEF OFFICER ROADS AND TRANSPORT COUNTY GOVERNMENT OF MERU P.O. BOX 120 - 60200, MERU.	THE GOVERNOR, COUNTY GOVERNMENT OF MERU P.O. BOX 120 - 60200, MERU.

Table of Contents

SECTION I: INVITATION FOR TENDERS 3
SECTION II - INSTRUCTION TO TENDERERS 4
Tender Documents 7
APPENDIX TO INSTRUCTIONS TO TENDERS 20
SECTION III CONDITIONS OF CONTRACT PART I 24
SECTION IV CONDITIONS OF CONTRACT PART II 25
SECTION IV 26
V) SPECIFICATIONS 56
SECTION VI DRAWINGS ..... **Error! Bookmark not defined.**
SECTION VII – BILLS OF QUANTITIES ..... **Error! Bookmark not defined.**
SECTION VIII – STANDARD FORMS 116
FORM OF INVITATION FOR TENDERS 116
FORM OF TENDER 117
LETTER OF ACCEPTANCE 118
FORM OF AGREEMENT 119
FORM OF TENDER SECURITY 121
PERFORMANCE BANK GUARANTEE (UNCONDITIONAL) 122
BANK GUARANTEE FOR ADVANCE PAYMENT 123
CONFIDENTIAL BUSINESS QUESTIONNAIRE 125
STATEMENT OF FOREIGN CURRENCY REQUIREMENTS 127
SCHEDULE OF MATERIALS;-BASIC PRICES 128
SCHEDULE OF LABOUR:- BASIC RATES 130
SCHEDULE OF THE PROPOSED APPROPRIATE EQUIPMENT. 131
DETAILS OF SUB-CONTRACTORS 132
CERTIFICATE OF TENDERER'S VISIT TO SITE 133
FORM OF WRITTEN POWER-OF-ATTORNEY 134
KEY PERSONNEL 135
SCHEDULE OF ONGOING PROJECTS 137
OTHER SUPPLEMENTARY INFORMATION 138
DECLARATION FORM 139
LETTER OF NOTIFICATION OF AWARD 140
FORM RB 1 141

SECTION I: INVITATION FOR TENDERS

TENDER NUMBER. CGM/ONT/092/2019-2020;

NEGOTIATION NUMBER: 764485

TENDER NAME: UPGRADING OF NKUBU MKT TO PAVED STANDARDS IN NKUENE WARD

The County Government of Meru (Roads, Transport and Energy Department) is a Government established under the Kenya Constitution 2010 and County Government Acts 2012 with the responsibility for management, development, rehabilitation, and maintenance of county roads.

The Department wishes to invite Contractors from competent eligible pre-qualified firms for the above mentioned Road Works whose budget is available under Kenya Devolution Support Program (KDSP) Vote F/Y: 2019/2020.

1.1 Pre-Qualified Contractors who will be interested shall download the tender document from the website www.meru.go.ke or Government Portal: https://tenders.go.ke and must forward their particulars immediately for recording and further clarification and addenda to procurement.finance@meru.go.ke

1.2 Completed tender documents shall be submitted through the IFMIS Supplier Portal: **supplier.treasury.go.ke** as per the requirements contained in the tender document so as to be received on or before the date and time indicated in IFMIS-**(9th, January 2020 at 10.30 AM). The Pretender site visit date will therefore be on 3rd January, 2020**

1.3 Tenderers shall furnish, as part of their application a tender security as per the tender instructions appendix

1.4 Bidders who may experience any challenges in accessing or uploading the tender documents in the IFMIS tender portal should contact IFMIS help desk Tel (0800721477) at the National Treasury

NOTE: The system will automatically lock out at the date & time of tender closing indicated in the IFMIS portal. Manual Submissions shall not be acceptable in this e-tendering and therefore no physical opening of the tenders

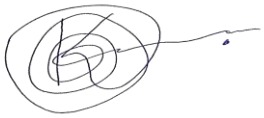

Signed
CHIEF OFFICER: ROADS AND TRANSPORT

SECTION II - INSTRUCTION TO TENDERERS

GENERAL

General/Eligibility/Qualifications/Joint venture/Cost of tendering

1. Definitions

(a) "Tenderer" means any persons, partnership firm or company submitting a sum or sums in the Bills of Quantities in accordance with the Instructions to Tenderers, Conditions of Contract Parts I and II, Specifications, Drawings and Bills of Quantities for the work contemplated, acting directly or through a legally appointed representative.

(b) "Approved tenderer" means the tenderer who is approved by the Employer

(c) Any noun or adjective derived from the word "tender" shall be read and construed to mean the corresponding form of the noun or adjective "bid". Any conjugation of the verb "tender" shall be read and construed to mean the corresponding form of the verb "bid."

(d) "Employer" means a Central Government Ministry, Local Authority, State Corporation or any other Public Institution.

2. Eligibility and Qualification Requirements

2.1 Eligibility requirements

This invitation to tender is open to all tenderers who are prequalified as stated in the appendix.

2.2 Qualification Requirements

To be qualified for award of Contract, the tenderer shall provide evidence satisfactory to the Employer of their eligibility under Sub clause 2.1. above and of their capability and adequacy of resources to effectively carry out the subject Contract. To this end, the tenderer shall be required to update the following information already submitted during prequalification:-

(a) Details of experience and past performance of the tenderer on the works of a similar nature and details of current work on hand and other contractual commitments.

(b) The qualifications and experience of key personnel proposed for administration and execution of the contract, both on and off site.

(c) Major items of construction plant and equipment proposed for use in carrying out the Contract. Only reliable plaint in good working order and suitable for the work required of it shall be shown on this schedule. The tenderer will also indicate on this schedule when each item will be available on the Works. Included also should be a schedule of plaint, equipment and material to be imported for the purpose of the Contract, giving details of make, type, origin and CIF value as appropriate.

(d) Details of sub contractors to whom it is proposed to sublet any portion of the Contract and for whom authority will be requested for such subletting in accordance with clause 4 of the Condition of Contract.

(e) A draft Program of Works in the form of a bar chart and Schedule of Payment which shall form part of the Contract if the tender is accepted. Any change in the Program or Schedule shall be subjected to the approval of the Engineer.

(f) Details of any current litigation or arbitration proceedings in which the tenderer is involved as one of the parties.

2.3 Joint Ventures

Tenders submitted by a joint venture of two or more firms as partners shall comply with the following requirements:-

(a) The tender, and in case of a successful tender, the Form of Agreement, shall be signed so as to be legally binding on all partners

(b) One of the partners shall be nominated as being in charge, and this authorization shall be evidenced by submitting a power of attorney signed by legally authorized signatories of all the partners

(c) The partner in charge shall be authorized to incur liabilities and receive instructions for an on behalf of any and all partners of the joint venture and the entire execution of the Contract including payment shall be done exclusively with the partner in charge.

(d) All partners of the joint venture shall be liable jointly and severally for the execution of the Contract in accordance with the Contract terms, and a relevant statement to this effect shall be included in the authorization mentioned under (b) above as well as in the Form of Tender and the Form of Agreement (in case of a successful tender)

(e) A copy of the agreement entered into by the joint venture partners shall be submitted with the tender.

2.4 Before the deadline for submission of tenders, the Employer may modify the tendering documents by issuing addenda. Any addendum thus issued shall be part of the tendering documents and shall be communicated in writing or by cable, telex or facsimile to all tenderers. Prospective tenderers shall acknowledge receipt of each addendum in writing to the Employer.

2.5 To give prospective tenderers reasonable time in which to take an addendum into account in preparing their tenders, the Employer shall extend, as necessary, the deadline for submission of tenders, in accordance with Clause 4.2 here below

3. Cost of Tendering

3.1 The Tenderer shall bear all costs associated with the preparation and submission of his tender and the Employer will in no case be responsible or liable for those costs, regardless of the conduct or outcome of the tendering process.

4. Site Visit

4.1. The tenderer is advised to visit and examine the Site and its surroundings and obtain for himself on his own responsibility, all information that may be necessary for preparing the tender and entering into a contract. The costs of visiting the Site shall be the tenderer's own responsibility.

4.2. The tenderer and any of his personnel or agents will be granted permission by the Employer to enter upon premises and lands for the purpose of such inspection, but only upon the express condition that the tenderer, his personnel or agents, will release and indemnify the Employer from and against all liability in respect of, and will be responsible for personal injury (whether fatal or otherwise), loss of or damage to property and any other loss, damage, costs and expenses however caused, which but for the exercise of such permission, would not have arisen.

4.3. The Employer shall organize a site visit at a date to be notified. A representative of the Employer will be available to meet the intending tenderers at the Site. Tenderers must provide their own transport. The representative will not be available at any other time for site inspection visits.

Each tenderer shall complete the Certificate of Tenderer's Visit to the Site, whether he in fact visits the Site at the time of the organized site visit or by himself at some other time

Tender Documents

5 Tender Documents

5.1 The Tender documents comprise the documents listed here below and should be read together with any Addenda issued in accordance with Clause 7 of these instructions to tenderers.

a. Form of Invitation for Tenders
b. Instructions to Tenderers
c. Form of Tender
d. Appendix to Form of Tender
e. Form of Tender Surety
f. Statement of Foreign Currency Requirements
g. Tender and Confidential Business Questionnaires
h. Details of Sub contractors
i. Schedules of Supplementary Information
j. General Conditions of Contract – Part I
k. Conditions of Particular Application – Part II
l. Specifications
m. Bills of Quantities
n. Drawings
o. Declaration Form

5.2 The tenderer is expected to examine carefully all instructions, conditions, forms, terms, specifications and drawings in the tender documents. Failure to comply with the requirements for tender submission will be at the tenderer's own risk. Pursuant to clause 22 of Instructions to Tenderers, tenders which are not substantially responsive to the requirements of the tender documents will be rejected.

5.3 All recipients of the documents for the proposed Contract for the purpose of submitting a tender (whether they submit a tender or not) shall treat the details of the documents as "private and confidential".

6 Inquiries by tenderers

6.1 A tenderer making an inquiry relating to the tender document may notify the Employer in writing or by telex, cable or facsimile at the Employer's mailing address indicated in the Invitation to Tender. The Employer will respond in writing to any request for clarification which he receives earlier than 7 days prior to the deadline for the submission of tenders. Written copies of the Employer's response (including the query but without identifying the source of the inquiry) will be sent to all prospective tenderers who have purchased the tender documents.

6.2 The procuring entity shall reply to any clarifications sought by the tenderer within 3 days of receiving the request to enable the tenderer to make timely submission of its tender.

7 Amendment of Tender Documents

7.1 At any time prior to the deadline for submission of tenders the Employer may, for any reason, whether at his own initiative or in response to a clarification requested by a prospective tenderer, modify the tender documents by issuing Addenda.

7.2 Any Addendum will be notified in writing or by cable, telex or facsimile to all prospective tenderers who have purchased the tender documents and will be binding upon them.

7.3 In order to allow prospective tenderers reasonable time in which to take the Addendum into account in preparing their tenders, the Employer may, at his discretion, extend the deadline for the submission of tenders.

Preparation of Tenders

8 Language of Tender

8.1 The tender and all correspondence and documents relating to the tender exchanged between the tenderer and the Employer shall be written in the English language. Supporting documents and printed literature furnished by the tenderer with the tender may be in another language provided they are accompanied by an appropriate translation of pertinent passages in the above stated language. For the purpose of interpretation of the tender, the English language shall prevail.

9 Documents Comprising the Tender

9.1 The tender to be prepared by the tenderer shall comprise:

i. the Form of Tender and Appendix thereto,
ii. a Tender Security
iii. the Priced Bills of Quantities and Schedules
iv. the information on eligibility and qualification
v. any other materials required to be completed and submitted in accordance with the Instructions to Tenderers.

The Forms, Bills of Quantities and Schedules provided in the tender documents shall be used without exception (subject to extensions of the schedules in the same format and to the provisions of clause 13.2 regarding the alternative forms of Tender Surety].

10 Tender Prices

10.1 All the insertions made by the tenderer shall be made in INK and the tenderer shall clearly form the figures. The relevant space in the Form of Tender and Bills of Quantities shall be completed accordingly without interlineations or erasures except those necessary to correct errors made by the tenderer in which case the

erasures and interlineations shall be initialed by the person or persons signing the tender.

10.2 A price or rate shall be inserted by the tenderer for every item in the Bills of Quantities whether the quantities are stated or not. Items against which no rate or price is entered by the tenderer will not be paid for by the Employer when executed and shall be deemed covered by the rates for other items and prices in the Bills of Quantities.

The prices and unit rates in the Bills of Quantities are to be the full [all-inclusive] value of the Work described under the items, including all costs and expenses which may be necessary and all general risks, liabilities and obligations set forth or implied in the documents on which the tender is based. All duties, taxes and other levies payable by the Contractor under the Contract, or for any other cause prior to the deadline for submission of tenders, shall be included in the rates and prices and the total Tender Price submitted by the tenderer.

Each price or unit rate inserted in the Bills of Quantities should be a realistic estimate for completing the activity or activities described under that particular item and the tenderer is advised against inserting a price or rate against any item contrary to this instruction.

Every rate entered in the Bills of Quantities, whether or not such rate be associated with a quantity, shall form part of the Contract. The Employer shall have the right to call for any item of work contained in the Bills of Quantities, and such items of work to be paid for at the rate entered by the tenderer and it is the intention of the Employer to take full advantage of unbalanced low rates.

10.3 Unless otherwise specified the tenderer must enter the amounts representing 10% of the sub-total of the summary of the Bills of Quantities for Contingencies and Variation of Prices [V.O.P.] payments in the summary sheet and add them to the sub-total to arrive at the tender amount.

10.4 The tenderer shall furnish with his tender written confirmation from his suppliers or manufacturers of basic unit rates for the supply of items listed in the Conditions of Contract clause 70 where appropriate. The Employer may require the tenderer to justify such rates so obtained from the suppliers or manufacturers.

10.5 The rates and prices quoted by the tenderer are subject to adjustment during the performance of the Contract only in accordance with the Provisions of the Conditions of Contract. The tenderer shall complete the schedule of basic rates and shall submit with his tender such other supporting information as required under clause 70 of the Conditions of Contract Part II.

10.6 Contract price variations shall not be allowed within the first 12 months of the contract.

10.7 Where quantity contract variation is allowed, the variation shall not exceed 15% of the original contract quantity.

10.8 Price variation requests shall be processed by the procuring entity within 30 days of receiving the request.

11 Currencies of Tender and Payment

11.1 Tenders shall be priced in Kenya Shillings and the tender sum shall be in Kenya Shillings.

11.2 Tenderers are required to indicate in the Statement of Foreign Currency Requirements, which forms part of the tender, the foreign currency required by them. Such currency should generally be the currency of the country of the tenderer's main office. However, if a substantial portion of the tenderer's expenditure under the Contract is expected to be in countries other than his country of origin, then he may state a corresponding portion of the contract price in the currency of those other countries. However, the foreign currency element is to be limited to two (2) different currencies and a maximum of 30% (thirty percent) of the Contract Price.

11.3 The rate or the rates of exchange used for pricing the tender shall be the selling rate or rates of the Central Bank ruling on the date thirty (30) days before the final date for the submission of tenders.

11.4 Tenderers must enclose with their tenders, a brief justification of the foreign currency requirements stated in their tenders.

12 Tender Validity

12.1 The tender shall remain valid and open for acceptance for a period of one Hundred and twenty (120)days from the specified date of tender opening or from the extended date of tender opening (in accordance with clause 7.4 here above) whichever is the later.

12.2 In exceptional circumstances prior to expiry of the original tender validity period, the Employer may request the tenderer for a specified extension of the period of validity. The request and the responses thereto shall be made in writing or by

cable, telex or facsimile. A tenderer may refuse the request without forfeiting his Tender Surety. A tenderer agreeing to the request will not be required nor permitted to modify his tender, but will be required to extend the validity of his Tender Surety correspondingly.

13 Tender Security

13.1 The tenderer shall furnish as part of his tender, a Tender Security in the amount and form stated in the Appendix to Instructions to Tenderers.

13.2 The tender security shall not exceed 2 percent of the tender price.

13.3 The Tender Security shall be valid at least One Hundred &Twenty (120) days beyond the tender validity period.

13.4 Any tender not accompanied by an acceptable Tender Surety will be rejected by the Employer as non-responsive.

13.5 The Tender Sureties of unsuccessful tenderers will be returned as promptly as possible but not later than twenty eight (28) days after expiration of the tender validity period. The Tender Surety of the successful tenderer will be returned upon the tenderer executing the Contract and furnishing the required Performance Security.

13.6 The Tender Surety may be forfeited:

a) if a tenderer withdraws his tender during the period of tender validity: or
b) in the case of a successful tenderer, if he fails, within the specified time limit
    i. to sign the Agreement, or
    ii. to furnish the necessary Performance Security
c) if a tenderer does not accept the correction of his tender price pursuant to clause 23.

14 No Alternative Offers

14.1 The tenderer shall submit an offer which complies fully with the requirements of the tender documents unless otherwise provided for in the appendix.

Only one tender may be submitted by each tenderer either by himself or as partner in a joint venture. A tenderer who submits or participates in more than one tender will be disqualified.

14.2 The tenderer shall not attach any conditions of his own to his tender. The tender price must be based on the tender documents. The tenderer is not required to present alternative construction options and he shall use without exception, the Bills of Quantities as provided, with the amendments as notified in tender notices, if any, for the calculation of his tender price. Any tenderer who fails to comply with this clause will be disqualified.

15 Pre-tender Meeting

15.1 If a pre-tender meeting is convened, the tenderer's designated representative is invited to attend at the venue and time in the Invitation to Tender. The purpose of the meeting will be to clarify issues and to answer questions on any matter that may be raised at that stage.

15.2 The tenderer is requested as far as possible to submit any questions in writing or by cable, to reach the Employer not later than seven (7) days before the meeting. It may not be practicable at the meeting to answer questions received late, but questions and responses will be transmitted in accordance with the following:

(a) Minutes of the meeting, including the text of the questions raised and the responses given together with any responses prepared after the meeting, will be transmitted without delay to all purchasers of the tender documents. Any modification of the tender documents listed in – Clause 9 which may become necessary as a result of the pre-tender meeting shall be made by the Employer exclusively through the issue of a tender notice pursuant to Clause 7 and not through the minutes of the pre-tender meeting.

(b) Non attendance at the pre-bid meeting will not be cause for disqualification of a bidder.

16 Format and Signing of Tenders

16.1 The tenderer shall prepare his tender as outlined in clause 9 above and mark appropriately one set "ORIGINAL" and the other "COPY".

16.2 The copy of the tender and Bills of Quantities shall be typed or written in indelible ink and shall be signed by a person or persons duly authorized to sign on behalf of the tenderer. All pages of the tender where amendments have been made shall be initialed by the person or persons signing the tender.

16.3 The complete tender shall be without alterations, interlineations or erasures, except as necessary to correct errors made by the tenderer, in which case such corrections shall be initialed by the person of persons signing the tender.

17 Submission of Tenders

17.1 Interested contractors shall download the tender document from the website freely, and MUST forward their particulars immediately for recording and further clarification and addenda to procurement.finance@meru.go.ke.

17.2 Completed tender documents shall be submitted through the IFMIS Supplier Portal; supplier.treasury.go.ke as per the requirements contained in the tender document so as to be received on or before the date and time indicated in IFMIS .

17.3 The tenderer shall not submit any alternative offers unless they are specifically required in the tender documents.

17.4 Only one tender may be submitted by each tenderer. Any tenderer who fails to comply with this requirement will be disqualified.

17.5 The system will automatically lock out at the date and time of tender closing indicated in the IFMIS portal. Manual submissions shall not be acceptable in the E-tendering and therefore no physical opening of the tenders.

17.6 The Employer may extend the deadline for submission of tenders by issuing an amendment in accordance with sub-clause 2.5 in which case all rights and obligations of the Employer and the Tenderers previously subject to the original deadline will then be subject to the new deadline

18 Modification and Withdrawal of Tenders

18.1 The tenderer may modify or withdraw his tender after tender submission, provided that written notice of the modification or withdrawal is received by the Employer prior to prescribed deadline for submission of tenders.

18.2 The tenderer's modification or withdrawal notice shall be prepared, sealed, marked and dispatched in accordance with the provisions for the submission of tenders, with the inner and outer envelopes additionally marked "MODIFICATION" or "WITHDRAWAL" as appropriate.

18.3 No tender may be modified subsequent to the deadline for submission of tenders.

18.4 No tender may be withdrawn in the interval between the deadline for submission of tenders and the period of tender validity specified on the

tender form. Withdrawal of a tender during this interval will result in the forfeiture of the Tender Surety.

18.5 Subsequent to the expiration of the period of tender validity prescribed by the Employer, and the tenderer having not been notified by the Employer of the award of the Contract or the tenderer does not intend to conform with the request of the Employer to extend the period of tender validity, the tenderer may withdraw his tender without risk of forfeiture of the Tender Surety.

Tender Opening and Evaluation

19 Tender Opening

19.1 The Employer will open the tenders in the presence of the tenderers' representatives who choose to attend at the time and location indicated in the Letter of Invitation to Tender. The tenderers' representatives who are present shall sign a register evidencing their attendance.

19.2 Tenders for which an acceptable notice of withdrawal has been submitted, pursuant to clause 19, will not be opened. The Employer will examine the tenders to determine whether they are complete, whether the requisite Tender Sureties have been furnished, whether the documents have been properly signed and whether the tenders are generally in order.

19.3 At the tender opening, the Employer will announce the tenderer's names, total tender price, tender price modifications and tender withdrawals, if any, the presence of the requisite Tender Surety and such other details as the Employer, at his discretion, may consider appropriate. No tender shall be rejected at the tender opening except for late tenders.

19.4 The Employer shall prepare minutes of the tender opening including the information disclosed to those present.

19.5 Tenders not opened and read out at the tender opening shall not be considered further for evaluation, irrespective of the circumstances.

20 Process to be Confidential

20.1 After the public opening of tenders, information relating to the examination, clarification, evaluation and comparisons of tenders and recommendations concerning the award of Contract shall not be disclosed to tenderers or other persons not officially concerned with such process until the award of Contract is announced.

20.2 Any effort by a tenderer to influence the Employer in the process of examination, evaluation and comparison of tenders and decisions concerning award of Contract may result in the rejection of the tenderer's tender.

21 Clarification of Tenders

21.1 To assist in the examination, evaluation and comparison of tenders, the Employer may ask tenderers individually for clarification of their tenders, including breakdown of unit prices. The request for clarification and the response shall be in writing or by cable, facsimile or telex, but no change in the price or substance of the tender shall be sought, offered or permitted except as required to confirm the correction of arithmetical errors discovered by the employer during the evaluation of the tenders in accordance with clause 24.

22.2 No tenderer shall contact the Employer on any matter relating to his tender from the time of the tender opening to the time the Contract is awarded. If the tenderer wishes to bring additional information to the notice of the Employer, he shall do so in writing.

22 Determination of Responsiveness

22.1 Prior to the detailed evaluation of tenders, the Employer will determine whether each tender is substantially responsive to the requirements of the tender documents.

22.2 For the purpose of this clause, a substantially responsive tender is one which conforms to all the terms, conditions and specifications of the tender documents without material deviation or reservation. A material deviation or reservation is one which affects in any substantial way the scope, quality, completion timing or administration of the Works to be undertaken by the tenderer under the Contract, or which limits in any substantial way, inconsistent with the tender documents, the Employer's rights or the tenderers obligations under the Contract and the rectification of which would affect unfairly the competitive position of other tenderers who have presented substantially responsive tenders.

22.3 Each price or unit rate inserted in the Bills of Quantities shall be a realistic estimate of the cost of completing the works described under the particular item including allowance for overheads, profits and the like. Should a tender be seriously unbalanced in relation to the Employer's estimate of the works to be performed under any item or groups of items, the tender shall be deemed not responsive.

22.4 A tender determined to be not substantially responsive will be rejected by the Employer and may not subsequently be made responsive by the tenderer by correction of the non-conforming deviation or reservation.

23 Correction of Errors

Tenders determined to be substantially responsive shall be checked by the Employer for any arithmetic errors in the computations and summations. Errors will be corrected by the Employer as follows:

(a) Where there is a discrepancy between the amount in figures and the amount in words, the amount in words will govern.

(b) Where there is a discrepancy between the unit rate and the line item total resulting from multiplying the unit rate by the quantity, the unit rate as quoted will prevail, unless in the opinion of the Employer, there is an obvious typographical error, in which case adjustment will be made to the entry containing that error.

(c) In the event of a discrepancy between the tender amount as stated in the Form of Tender and the corrected tender figure in the main summary of the Bills of Quantities, the amount as stated in the Form of Tender shall prevail.

(d) The Error Correction Factor shall be computed by expressing the difference between the tender amount and the corrected tender sum as a percentage of the corrected builder's work (i.e. corrected tender sum less Prime Cost and Provisional Sums.

(e) The Error Correction Factor shall be applied to all builder's work (as a rebate or addition as the case may be) for the purposes of valuations for Interim Certificates and valuations of variations.

(f) The amount stated in the tender will be adjusted in accordance with the above procedure for the correction of errors and, with concurrence of the tenderer, shall be considered as binding upon the tenderer. If the tenderer does not accept the corrected amount, the

tender may be rejected and the Tender Security may be forfeited in accordance with clause 13.

24 Conversion to Single Currency

24.1 For compensation of tenders, the tender price shall first be broken down into the respective amounts payable in various currencies by using the selling rate or rates of the Central Bank of Kenya ruling on the date twenty one (21) days before the final date for the submission of tenders.

24.2 The Employer will convert the amounts in various currencies in which the tender is payable (excluding provisional sums but including Dayworks where priced competitively) to Kenya Shillings at the selling rates stated in clause 25.1.

25 Evaluation and Comparison of Tenders

25.1 The Employer will evaluate only tenders determined to be substantially responsive to the requirements of the tender documents in accordance with clause 23.

25.2 In evaluating tenders, the Employer will determine for each tender the evaluated tender price by adjusting the tender price as follows:

(a) Making any correction for errors pursuant to clause 24.

(b) Excluding Provisional Sums and provision, if any, for Contingencies in the Bills of Quantities, but including Day works where priced competitively.

25.3 The Employer reserves the right to accept any variation, deviation or alternative offer. Variations, deviations, alternative offers and other factors which are in excess of the requirements of the tender documents or otherwise result in the accrual of unsolicited benefits to the Employer, shall not be taken into account in tender evaluation.

25.4 Price adjustment provisions in the Conditions of Contract applied over the period of execution of the Contract shall not be taken into account in tender evaluation.

25.5 If the lowest evaluated tender is seriously unbalanced or front loaded in relation to the Employer's estimate of the items of work to be performed under the Contract, the Employer may require the tenderer to produce detailed price analyses for any or all items of the Bills of Quantities, to demonstrate the relationship between those prices, proposed construction

methods and schedules. After evaluation of the price analyses, the Employer may require that the amount of the Performance Security set forth in clause 29 be increased at the expense of the successful tenderer to a level sufficient to protect the Employer against financial loss in the event of subsequent default of the successful tenderer under the Contract.

25.6 Firms incorporated in Kenya where indigenous Kenyans own 51% or more of the share capital shall be allowed a 10% preferential bias provided that they do not sub-contract work valued at more than 50% of the Contract Price excluding provisional sums to a non-indigenous sub-contractor.

25.7 Preference where allowed in the evaluation of tenders shall not exceed 15%

25.8 The procuring entity may at any time terminate procurement proceedings before contract award and shall not be liable to any person for the termination.

25.9 The procuring entity shall give prompt notice of the termination to the tenderers and on request give its reasons for termination within 14 days of receiving the request from any tenderer.

25.10 A tenderer who gives false information in the tender document about its qualification or who refuses to enter into a contract after notification of contract award shall be considered for debarment from participating in future public procurement.

25.11 Poor past performance shall not be used as an evaluation criteria unless specifically provided for in the appendix.

27 Award of Contract

Award Criteria

27.1 Subject to Sub-clause 27.2, the Employer will award the Contract to the tenderer whose tender is determined to be substantially responsive to the tender documents and who has offered the lowest evaluated tender price subject to possessing the capability and resources to effectively carry out the Contract Works as required in Sub-clause 2.1 and 2.2 hereabove.

27.2 The Employer reserves the right to accept or reject any tender, and to annual the tendering process and reject all tenders, at any time prior to award of Contract, without thereby incurring any liability to the affected tenderers or any obligation to inform the affected tenderers of the grounds for the Employer's action.

28 Notification of Award

28.1 Prior to the expiration of the period of tender validity prescribed by the Employer, the Employer will notify the successful tenderer by cable, telefax or telex and confirmed in writing by registered letter that his tender has been accepted. This letter (hereinafter and in all Contract documents called "Letter of Acceptance") shall name the sum (hereinafter and in all Contract documents called "the Contract Price") which the Employer will pay to the Contractor in consideration of the execution and completion of the Works as prescribed by the Contract.

28.2 At the same time that the Employer notifies the successful tenderer that his tender has been accepted, the Employer shall notify the other tenderers that the tenders have been unsuccessful.

28.3 Within fourteen [14] days of receipt of the Form of Contract Agreement from the Employer, the successful tenderer shall sign the form and return it to the Employer together with the required Performance Security.

28.4 The parties to the contract shall have it signed within 30 days from the date of notification of contract award unless there is an administrative review request.

29 Performance Guarantee

29.1 Within twenty eight [28] days of receipt of the notification of award from the Employer, the successful tenderer shall furnish the Employer with a Performance Security in the amount stated in the Appendix to Instructions to Tenderers and in the format stipulated in the Conditions of Contract.

29.2 The Performance Security to be provided by the successful tenderer shall be an unconditional Bank Guarantee issued at the tenderer's option by a reputable Bank approved by the Employer and located in the Republic of Kenya and shall be divided into two
elements namely, a performance security payable in foreign currencies (based upon the exchange rates determined in accordance with clause 60(5) of the Conditions of Contract) and a performance
security payable in Kenya Shillings. The value of the two securities shall be in the same proportions of foreign and local currencies as requested in the form of foreign currency requirements.

29.3 Failure of the successful tenderer to lodge the required Performance Security shall constitute a breach of Contract and sufficient grounds for the annulment of the award and forfeiture of the Tender Security and any other remedy

under the Contract. The Employer may award the Contract to the next ranked tenderer.

30 Advance Payment

An advance payment, if approved by the Employer, shall be made under the Contract, if requested by the Contractor, in accordance with clause 60(1) of the Conditions of Contract. The Advance Payment Guarantee shall be denominated in the proportion and currencies named in the form of foreign currency requirements. For each currency, a separate guarantee shall be issued. The guarantee shall be issued by a Bank located in the Republic of Kenya, or a foreign Bank through a correspondent Bank located in the Republic of Kenya, in either case subject to the approval of the Employer.

31 Corrupt or fraudulent practices

31.1 The procuring entity requires that tenderers observe the highest standard of ethics during the procurement process and execution of contracts. A tenderer shall sign a declaration that he has not and will not be involved in corrupt or fraudulent practices.

APPENDIX TO INSTRUCTIONS TO TENDERS

INSTRUCTIONS	PARTICULARS OF APPENDIX TO INSTRUCTIONS TO TENDERS
1	Employer is County Government of Meru
2.1	As per Prequalification previously done
2.2	Evaluation provided in this appendix
3.1	Price of the tender is nil, it should be downloaded free of charge from County website
4.1	The site visit is mandatory and it will be as per invitation letter
10.6	Contract variations shall be within the Public Procurement & Asset Disposal Act 2015
12.1	Tender shall be valid for 120 days.
13.1/13.2-13.6	Tender security shall be as per evaluation criteria

17.1/17.2	Submission of tenders: Completed tender documents must be submitted through the IFMIS Supplier Portal: supplier.treasury.go.ke as per the requirements contained in the tender document so as to be received on or before the date and time indicated in *IFMIS-(9th January 2020 at 10.30 a.m)*
23	No correction of errors pursuant to Section 82 of the PPADA 2015
28.1/28.2/28.3/28.4	Notification of award
29.1/29.2/29.3	Performance Security shall be 5% of the Contract Price
Evaluation Criteria:	You shall be requested to meet the Mandatory & Technical conditions before further negotiations with the CGM.

Mandatory Conditions

I. Proof of Prequalification
II. Original Tender Security in the form of a Bank Guarantee, as per the appendix
I. Duly completed, signed and stamped Form of Tender
II. Relevant Certificate copy of registration by National Construction Authority to carry out similar works. (NCA 6- and above)- Road works Contractor
III. Copy of relevant current National Construction Authority Practicing License (NCA 6 and above)- Road works Contractor
IV. Copy of recent CR12 issued within the last 12 months from the date of Tender Opening & copies of National IDs/ Passports for the Directors & Partnership Deed if any
V. Proof of attendance of Mandatory pretender Site Visit
VI. Bills of Quantities duly Completed, Signed and Stamped by the Tenderer in the format provided.
VII. To be eligible for award of contract a contractor should not have more than three ongoing contract totaling to ten million in the department of roads transports and energy.

Technical Conditions

No.	Evaluation criteria	Evaluation attribute	Weighing Score	Maximum score
1.	Experience of the firm	Already confirmed during pre-qualification: TENDER NUMBER: CGM/ONT/IFP/008/2019-20	50	50
2.	Provide Actual Names of Staffing Levels/ Professional qualification(attach copies of certificates) to be used during execution of the project	Site Engineer with degree	5	10
		Foreman /site agent a with diploma	3	
		Supervisors	2	
3.	Financial capacity (Audited Accounts)	Acid test/ quick ratio= Current assets - Stock / Current liability	2.1 ratio Others prorated at The ratio x 15 / 2	15
		Current ratio = Current assets / Current liability	2.1 ratio Others prorated at The ratio x 15 / 2	15
4	Provide Equipment and accessories owned by the company and to be directly assigned to the project during the contract period (Attach certified copies of certificate of ownership purchase receipts, sales agreements or lease	Provide details/list of at least 5 equipment and accessories and explain what they will be used for in the project implementation(2marks for each equipment)		10

No.	Evaluation criteria	Evaluation attribute	Weighing Score	Maximum score
	agreements)			
TOTAL				100%

	Financial Evaluation Criteria
1.	Prices quoted: should be net inclusive of all taxes, must be in Kenya shillings and shall remain valid for (120) days from the closing date of tender
2.	Only bidders who score 70% and above in the technical criteria will be considered for financial ranking
3.	Award will be made to the lowest evaluated contractor subject to the following:- i. Due diligence Record to confirm unsatisfactory or default in performance obligations in any contract. ii. The bidder shall be disqualified and the next lowest tenderer considered iii. Negotiating & harmonizing any cases of errors or/ and front loading significant enough to cause distortion in a successful contractor's cash flow or put the client in a contractually unfavorable or risky position iv. Any necessary negotiation and agreement as pertains the allocated budget vis a vis the lowest quoted price

SECTION III CONDITIONS OF CONTRACT PART I

GENERAL CONDITIONS

The Conditions of Contract, Part I – General Conditions, shall be those forming Part I of the "Conditions of Contract for works of Civil Engineering Construction, Fourth Edition 1987, re-printed in 1992 with further amendments, prepared by the Federation Internationale des Ingenieurs – conseils (FIDIC). The Conditions are subject to variations and additions set out in Part II hereof entitled "Conditions of Contract, Part II - Conditions of Particular Application".

Note

i. The standard text of the General Conditions of Contract must be retained intact to facilitate its reading and interpretation by tenderers. Any amendments and additions to the General Conditions, specific to a given Contract, should be introduced in the Conditions of Particular Application or in the Appendix to Form of Tender.

ii. The Conditions of Particular Application take precedence over the General Conditions of Contract.

iii. Copies of the FIDIC Conditions of Contract can be obtained from:
FIDIC Secretariat
P.O. Box 86
1000 Lausanne 12
Switzerland
Fax: 41 21 653 5432
Telephone: 41 21 653 5003

SECTION IV CONDITIONS OF CONTRACT PART II

(CONDITIONS OF PARTICULAR APPLICATION)

TABLE OF CLAUSES

CLAUSE NUMBERS	DESCRIPTION	PAGE
1.	Definitions and interpretation……	24
2.	Engineer's Duties and Authority……..	24
4.	Assignment and sub-contracting	
5.	Contract Document ……	25
8.	_____ ……	25
10	Performance security ……	26
11	Inspection of Site ……	27
14	Programme to be submitted ……	27
15	Contractor's superintendence ……..	28
16	Engineers at liberty to object……..	
19	Safety, security and profession of the environment ……	29
21	Insurance of works and contractors equipment……	30
23	Third Party Insurance ……..	30
25	Insurance notices ……	31
26	Compliance with statutes and regulations……	31
28	Royalties	32
29	Interference with traffic and Adjoining properties	32
34	Labour	32
41	Commencement and delays	34
42	Possession of site	35
45	Working hours	35
47	Liquidated damage	36
49	Defects liability	36
52	Variations	36
54	Plant, Temporary works and materials	36
55	Quantities	37
56	Measurements	37
58	Provisional sums	38
60	Certificate and payments	40
63	Remedies	46
65	Special Risks	46
67	Settlement of Disputes	46

68	Notices	47
69	Default of Employer	47
70	Changes in cost and legalization	48
73	Declaration Against waiver	50
74	Bribery and collusion	50
75	Contract Confidential	51
76	Employer's officers	51
77	Taxes and duties	51
78	Joint Ventures	52

SECTION IV

CONDITIONS OF CONTRACT PART II – CONDITIONS OF PARTICULAR APPLICATION

GENERAL

The Conditions of Contract Part II – Conditions of Particular Application modify and compliment like-numbered clauses in the Conditions of Contract Part I – General Conditions. Both Parts shall be read together, with the Conditions of Particular Application prevailing in case of conflict or discrepancy. Clauses of the General Conditions not specifically modified and supplemented shall remain in effect.

Clause No.

Definitions and Interpretation

1.1 (a)(i) The said "Employer" shall be _____(*Name of Employer*) represented by _____(*Name of Employer's representative*)

(iv) The said "Engineer" shall be _____(*Name of the Engineer*) or any other competent person appointed by the Employer, and notified to the Contractor, to act in replacement of the Engineer.

(b)(i) Insert in line 2 after "the Bills of Quantities", the following, "the rates entered by the Contractor (whether or not such rate be employed in computation of the Contract Price)".

Add the following sub-clause;

CONDITIONS OF CONTRACT	CLAUSE	AMOUNT
Performance Security	10.1/10.2	5% (Unconditional bank guarantee only)
Instructions in Writing	2.5	Execution of works under site instructions from Resident Engineer to

		commence within three (3) days
Amount of Bid Security (Unconditional Bank Guarantee)	13.1	Ksh. 200,000/= in the form of Unconditional Bank Guarantee
Program to be submitted	14.1	Immediately after issuance of Order to Commence
Cash flow estimate to be submitted	14.3	Immediately after issuance of Order to Commence
Minimum amount of Third Party Insurance	23.2	1% of the Contract Sum
Period for commencement, from Engineer's order to commence	41.2	14 days
Contract period	47.2	Six (6) months
Amount of liquidated damages	47.2	0.05% of Contract Sum per day
Limit of liquidated damages	47.2	5% of Contract Sum
Defects Liability period	49.1	Three(3) months
Percentage of Retention	60.3	10% of Interim Payment Certificate
Limit of Retention Money	60.3	5% of Contract Sum
Valuation of Works	52.1	As per the actual measurements
Time within which payment to be made after Interim Payment Certificate signed by Engineer	60.4	28 days
Time within which payment to be made after Final Payment Certificate signed by Engineer	60.14	28 days
Appointer of Adjudicator	67.3	The Chartered Institute of Arbitrators (Kenya)
Notice to Employer and Engineer	68.2	The Employers address is: Chief Officer Roads and Transport P.O. Box 120-60200 Meru

Engineer's Duties and Authority

2.1 (b) The Engineer shall obtain specific approval of the Employer before taking any of the following actions specified in Part I:

(i) Consenting to the sub-letting of any part of the Works under clause 4.

(ii) Certifying additional cost determined under Clause 12

(iii) Determining an extension of time under Clause 44

(iv) Issuing a variation under Clause 51 except in an emergency situation as reasonably determined by the Engineer.

(v) Fixing rates or prices under clause 52

4 Assignment and Subcontracting

No single subcontract may be for more than 10 percent of the Contract Price nor shall the sum of all subcontracts exceed 25 percent of the Contract price. No one subcontractor may be awarded subcontracts to a total value greater than 10 percent of the Contract Price. All subcontracts greater than 2 percent of the Contract Price are to have the prior consent of the Engineer. The Contractor shall however, not required such consent for purchases of materials or to place contracts for minor details or for any part of the Works of which the manufacturer of supplier is named in the Contract. Any such consent shall not relieve the Contractor from any liability or obligation under the Contract and he shall be responsible for the acts, defaults and neglects of any subcontractor, his agents, servants or workmen as fully as if they were the acts, defaults or neglects of the Contractor, his agents, servants or workmen.

5 Contract Documents

5.1 (a) The language governing this Contract shall be English.

The "Ruling Language" which shall be used to interpret this Contract shall be English. Communication between the Contractor and Engineer or Engineer's representative shall be in English.

(b) The law applicable to this Contract shall be the laws of the Republic of Kenya. Except to the extent otherwise provided by the Contract, the Kenyan courts shall have exclusive jurisdiction to hear and to determine all actions and proceedings in connection with and arising out of the Contract, and the Contractor shall submit to the

jurisdiction of Kenyan courts for the purpose of any such actions and proceedings.

5.2 Delete the documents listed 1-6 and substitute:

(1) The Contract Agreement;
(2) The Notification of Award;
(3) Tender and Appendix to Form of Tender;
(4) The Conditions of Contract Part II;
(5) The Conditions of Contract Part I (FIDIC);
(6) The Special Specifications;
(7) The Standard Specifications for Road and Bridge Construction, MOTC – 1986;
(8) Clarifications and rectifications accepted by the Employer; and
(9) The Drawings;
(10) The priced Bills of Quantities; and
(11) Schedules and other documents forming part of the Contract.

8.1 Add to sub clause 8.1 the following:

(a) Within 28 days after receipt of the Engineer's order to commence the Works, the Contractor shall establish an office at the Site duly equipped for the Contractor's representative and his supervisory personnel.

The Contractor shall maintain this office throughout the Contract period. The said office shall be the legal domicile of the Contractor, and all correspondence sent to this office shall be deemed to have been sent to the Contractor's head office.

(b) A foreign Contractor or a Kenya-foreign joint venture, if not registered in Kenya under the applicable laws of Kenya, shall undertake registration upon receipt of the letter of acceptance and prior to signing of the Contract.

10.1 <u>Performance Security</u>

In lines 1,2 and 3 delete the words "If the Contract… within 28 days" and substitute "The Contractor shall obtain a Performance Security within 28 days ……"

Add the following at the end of this Sub-Clause:-

The Performance Security shall be issued by a Bank incorporated in Kenya. The amount of guarantee shall be as stated in the Appendix to Form of Tender.

The bank guarantee, shall be issued either (a) by an established and reputable bank approved by the Employer and located in Kenya or a foreign bank through a correspondent established and reputable bank located in Kenya and approved by the Employer or (b) directly by a foreign bank acceptable to the Employer. The performance security shall normally be in the currency or currencies requested for payment by the Contractor and in the same proportions as those requested for payment in the Contract.

The performance security may, subject to the approval of the Engineer, be adjusted at the end of each period of 12 months to reflect the residual value of the Contract Works.

10.2 The performance guarantee shall be valid until a date 28 days after the date of issue of the Taking-Over Certificate. The security shall be returned to the Contractor within 28 days of the expiration.

11.1 <u>Inspection of Site</u>

Add the words "and the Contractor shall be deemed to have based his tender on all the aforementioned" after the words "affect his tender".

Delete the last paragraph completely and replace with the following:

"The Employer in no way guarantees completeness nor accuracy of the soil, materials, subsurface and hydrological information made available to the Contractor at the time of tendering or at any other time during the period of the Contract, and the Contractor shall be responsible for ascertaining for himself all information as aforesaid for the execution of Works and his tender shall be deemed to have been priced accordingly.

14.1 <u>Programme to be Submitted</u>

The time within which the Programme shall be submitted shall be twenty eight (28) days . This detailed Programme shall be based upon the programme submitted by the Contractor as part of his tender and shall, in no material manner, deviate from the said programme.

The Contractor shall allow in his Programme for the following 11 public holidays per calendar year in Kenya upon which the Contractor shall not be permitted to work

New Year's Day	(1st January)
Good Friday	
Easter Monday	
Labour Day	(1st May)
Madaraka Day	(1st June)
Idd-Ul-Fitr	(29
Moi Day	(10th October)
Kenyatta Day	(20th October)
Jamhuri Day	(12th December)
Christmas Day	(25th December)
Boxing Day	(26th December)

The Contractor should also allow per calendar year for a further 2 unspecified public holidays which may be announced by the Government of Kenya with no prior notification, and upon which he shall not be permitted to work.

14.2 Add the following at the end of this sub clause:-

The Employer shall have the right to withhold payment at any time if the Contractor fails to submit the contractual construction programmes in accordance with sub clause 14.1 above or revise construction programmes due to his negligence, failure or omission.

14.3 **Cash Flow Estimate to be Submitted**

The time limit within which a detailed cash flow estimate is to be submitted shall be twenty eight (28) days.

In preparing the estimates, the Contractor shall make provision for Advance payment, repayment of advance, retention, payment for services provided by the Employer and timing implications of sub clause 60 – Certificates and Payments.

15 Contractor's Superintendence

Add the following at the end of the first paragraph of sub-clause 15.1:

15.1 The Contractor shall, within seven (7) days of receipt of the Engineer's order to commence the Works, inform the Engineer in

writing, the name of the Contractor's representative and the anticipated date of his arrival on Site.

Add the following sub-clause 15.2:

15.2 The Contractor's agent or representative on the Site shall be an Engineer registered by the Engineer's Registration Board of Kenya in accordance with the Laws of Kenya cap. 530 or have equivalent status approved by the Engineer and shall be able to read, write and speak English fluently.

16.2 **Engineer at Liberty to object**

At the end of this clause add "by a competent substitute approved by the Engineer at the Contractor's own expense".

The Contractor is encouraged to the extent practicable and reasonable, to employ staff and labour with appropriate qualifications who are Kenyan citizens.

Safety, Security and Protection of the Environment

19.1 Add at the end of sub clause 19.1 the following: -

The formulation and enforcement of an adequate safety program shall be the obligation of the Contractor with respect to all the Works under this Contract, regardless of whether performed by the Contractor or his subcontractors. The Contractor shall, within 14 days after commencement of the Works, meet the Engineer to present and discuss his plan for the establishment of such safety measures as may be necessary to provide against accidents, unsafe acts and so forth. Within 28 days after commencement of the Works, the Contractor shall submit a written safety program to the Engineer covering the overall Works and based on the laws and regulations of Kenya. In addition, he shall prepare special safety programs for blasting and handling of explosives as stipulated in the General and Special Specifications.

Notwithstanding the foregoing, the Contractor shall observe the following measures with a view to reducing or eliminating adverse environmental effects by the Site Works:

(i) All queries and borrow pits shall be filled and landscaped to their original state after extraction of construction material

(ii) Soil erosion due to surface runoff or water from culverts or other drainage structures should be avoided by putting in place proper erosion control measures that shall include, but not limited to grassing , planting of trees, gabions etc.

(iii) Long traffic diversion roads shall be avoided so as to minimize the effect of dust on the surrounding environment. In any case all diversions shall be kept damp and dust free at the Contractor's expense.

(iv) Spillage of oils, fuels and lubricants shall be avoided and if spilt, shall be collected and disposed off in such a way as not to adversely affect the environment.

(v) Rock blasting near settlement areas shall be properly coordinated with the relevant officers of the Government so as to minimize noise pollution and community interference.

(vi) Dumping shall be done only at designated dumping areas and not haphazardly on surroundings.

Insurance of Works & Contractor's Equipment

21.1 (a) Delete the first sentence of this clause and replace with the following:

"Prior to commencement of the Works the Contractor shall, without limiting his or the Employer's obligations and responsibilities under Clause 20, insure to the satisfaction of the Employer."

(b) Add the following words at the end of sub - paragraph (a) and immediately before the last word in (b)

"it being understood the insurance shall provide for compensation to be payable in the types and proportions of the currencies required to rectify the loss or damage incurred."

In sub clause 21.1(b), delete the words "or as may be specified in Part II of these Conditions".

21.2 (a) Delete the words "from the start of Work at the Site" and substitute with the words "from the first working day after the commencement date"

(c) Add the following sub-clause: "It shall be the responsibility of the Contractor to notify the insurance company of any change in the nature and extent of the

Works and to ensure the adequacy of the insurance coverage at all times during the period of the Contract".

23.1 Third Party Insurance

Add the following at the beginning of this sub-clause:-

"Prior to commencement of the Works ……"

23.2 Minimum Amount of Insurance

Add the following at the end of this sub-clause:-
" …… with no limits to the number of occurrences."

25.1 Insert the words "as soon as practicable after the respective insurances have been taken out but in any case" before the words "Prior to the start of Work at the Site"

Add the following sub-clauses 25.5 to 25.7

25.5 **Insurance Notices**

Each policy of insurance effected by the Contractor for the purpose of the Contract shall include a provision to the effect that the Insurer shall have a duty to give notice in writing to the Contractor and Employer of the date when a premium becomes payable not more than thirty (30) days after the giving of such notice.

25.6 **Re-insurance in Kenya**

The risks against which the Contractor is obliged to insure under the Contract shall be insured through established and reputable companies approved by the Employer and located in Kenya and any cover against risks which the Contractor may enjoy shall be reinsured in Kenya by an approved Kenyan Insurance Company In respect of the Contractor's obligations under the Contract.

25.7 It shall be the responsibility of the Contractor to notify the insurers under any of the insurances referred or event which by the terms of such insurances are required to be so notified and the Contractor shall indemnify and keep indemnified the Employer against all losses, claims, demands, proceedings, costs, charges and expenses whatsoever arising out of or in consequence of any default by the Contractor in complying with the requirements of this sub clause whether as a result of avoidance of such insurance or otherwise.

26. **Compliance with Statutes, Regulations**

Add the following sub-clause 26.2;-

The Employer will repay or allow to the Contractor all such sums as the Engineer shall certify to have been properly payable and paid by the Contractor in respect of such fees. Provided always that, without prejudice to sub clause, nothing contained in this clause shall be deemed to render the Employer liable to all claims which may be considered to fall within the provisions of clause 22.1.

Royalties

28.2 Add the following at the end of this sub-clause;

"The Contractor shall also be liable for all payments or compensation, if any, that are levied in connection with the dumping of part or all of any such material."

Interference with Traffic and Adjoining Properties

29.2 Add new sub-clause 29.2;

The Contractor shall reinstate all properties whether public or private which are damaged in consequence of the construction and maintenance of the Works to a condition at least equal to that prevailing before his first entry on them.

If in the opinion of the Engineer the Contractor shall have failed to take reasonable and prompt action to discharge his obligations in the matter of reinstatement, the Engineer will inform the Contractor in writing of his opinion, in which circumstances the Employer reserves the right to employ others to do the necessary work of reinstatement and to deduct the cost thereof from any money due or to become due to the Contractor.

The Contractor shall promptly refer to the Employer all claims, which may be considered to fall within the provisions of Clause 22.1.

LABOUR

34.2 **Conditions of Employment of Labour**

The Contractor shall be responsible for making all arrangements for and shall bear all costs relating to recruitment, obtaining of all necessary visas, permits or other official permission for movements of staff and labour.

34.3 Fair Wages

The Contractor shall, in respect of all persons employed anywhere by him in the execution of the Contract, observe and fulfill the following conditions:

(a) The Contractor shall pay the rates of wages, observe hours of labour and provide conditions, housing amenities and facilities not less favorable than those required by the Regulation of wages (Building and Construction Industry) Order 1998, and any subsequent amendments thereto, or in any ministry of labour or other government department in consultation with the district whose general circumstances in the trade or industry in which the Contractor is engaged are similar. The Contractor shall at all times during the continuation of the Contract display, for the information of his employees, a notice setting out the general rates of wages, hours and conditions of labour of his employees and a copy of this clause.

(b) In the absence of any rates for wages, hours or conditions of labour so established, the Contractor shall pay rates or wages and observe hours and conditions for labour which are not less favourable than the general circumstances in the trade or industry in which the Contractor is engaged.

(c) Where the absence of established rates of wages, hours and conditions of labour or the dissimilarity of the general circumstances in the trade or industry in which the Contractor is engaged prevent
the Contractor from observing rates of wages, hours and conditions of labour ascertained under sub-paragraph (a) or (b) above, the Contractor in fixing the rates of wages, hours and conditions of labour of his employees shall be guided by the advise of the labour department.

(d) The Contractor shall recognize the freedom of his employees to be members of trade unions.

(e) The Contractor shall maintain records of the times worked by, and the wages paid to his employees. The Contractor shall furnish to the Employer, if called upon so to do, particulars of the rates of wages, hours and conditions of labour as the employer may direct.

(f) The Contractor shall be responsible for observance by his sub-Contractors of the foregoing provisions.

34.4 Breach of Fair Wages Clause

Should a claim be made to the Employer alleging the Contractor's default in payment of fair wages to any workman employed on the Contract and if proof thereof satisfactory to the Employer is furnished by the labour department, the Employer may, failing payment by the Contractor, pay the claims out of any monies due or which may become due to the Contractor under the Contract.

34.5 **Recruitment of Unskilled Labour**

Any additional unskilled labour which may be required by the Contractor for the Works and which is not in his employ at the time of the acceptance of the tender shall be recruited by the Contractor from the labour office nearest to the Site of the Works.

34.6 **Compensation for injury**

The Contractor shall, in accordance with the Workman's Compensation Act Chapter 236 of the laws of Kenya and any other regulations in force from time to time in Kenya ,pay compensation for loss or damage suffered in consequence of any accident or injury or disease resulting from his work to any workman or other person in the employment of the Contractor or any sub-contractor.

34.7 **Labour Standards**

a) The Contractor shall comply with the existing local labour laws, regulations and labour standards.

b) The Contractor shall formulate and enforce an adequate safety program with respect to all Work under this Contract, whether

performed by the Contractor or his sub-contractors. The Contractor has assurance from the Employer of cooperation where the implementation of these safety measures requires joint cooperation.

c) Upon written request of the Employer the Contractor will remove or replace any of his employees employed under this Contract.

34.8 **Recruitment**

The Contractor shall not induce personnel of the employer or the Engineer to leave their regular employment and shall not, without the prior consent in writing of the Employer, employ personnel who have resigned from such service within the preceding twelve months.

35 Add the following subclauses 35.2 and 35.3:-

35.2 The Contractor shall maintain such records and make such reports concerning safety, health and welfare of persons and damage to property as the Engineer may from time to time prescribe.

35.3 The Contractor shall report to the Engineer details of any accident as soon as possible after its occurrence. In the case of any fatality or serious accident, the Contractor shall, in addition, notify the Engineer immediately by the quickest available means. The Contractor shall also notify the relevant authority(s) whenever such report is required by the law.

41.1 **Commencement and Delays**

Insert immediately after the word Works------ "on Site within 28 days" and before the word ----------after

41.2 **Definition of Commencement**

For the purposes of this clause, the Works shall be deemed to have commenced when all of the following conditions are satisfied;

a) The approved competent and authorized agent or representative of the Contractor is resident in the project area and is giving his whole time to the superintendence of the Works.

b) The provision by the Contractor of evidence that all insurances required by the Contract are in force.

c) The Contractor has an established office in the project area with postal address for receipt of correspondence.

d) The principal items of constructional plant have been brought to Site and put to work in the execution of the permanent Works.

42.4 **Possession of Site and Access Thereto**

Add the following to this clause 42.4;

The Contractor shall not enter any part of the Site until he has requested and received permission to do so from the Employer or the Engineer.

The Contractor shall not use any portion of the Site for any purpose not connected with the Works.

44.1 Add at the end of sub-clause 44.1 the following:

Neither rains falling between 1st November and 31st December (inclusive) and between 1st February and 31st May (inclusive) nor floods caused by such rains shall be deemed exceptional weather conditions such as may fairly entitle the Contractor to an extension of time for the completion of the Work.

45 Working Hours

"subject to any provision to the contrary contained in the Contract, the Contractor shall have the option to work continuously by day and by night and on locally recognized days of rest.

If the Contractor requests for permission to work by day and night and if the Engineer shall grant such permission, the Contractor shall not be entitled to any additional payment for so doing. All such work at night shall be carried out without unreasonable noise or other disturbance and the Contractor shall indemnify the Employer from and against any liability for damages on account of noise or other disturbance created while or in carrying out night work and from and against all claims, demands, proceedings, costs, charges and expenses whatsoever in regard or in relation to such liability. In addition, the Contractor shall be required to provide, for any work carried out by night or recognized days of rest, adequate lighting and other facilities so that the Work is carried out safely and properly. In the event of the Engineer granting permission to the Contractor to work double or rotary shifts or on Sundays, the Contractor shall be required to meet any additional costs to the Employer in the administration and supervision of the Contract arising from the granting of this permission.

47.2 Reduction of Liquidated Damages

There shall be no reduction in the amount of liquidated damages in the event that a part or a section of the Works within the Contract is certified as completed before the whole of the Works comprising that Contract.
No bonus for early completion of the Works shall be paid to the Contractor by the Employer.

The sum stated in the Appendix to Form of Tender as liquidated damages shall be increased by a sum equivalent to any amount payable by the Employer to the Contractor under clause 70.1 in respect of an increase in costs in such period that would not have been incurred by the Contractor if the Works had been completed by the due date for completion prescribed by clause 43.

Defects Liability

49.2 Add at the end of this sub-clause the following sentence:-

Any work ordered to be executed under this clause shall be done at a time and in a manner as directed by the Engineer so as to interfere as little as possible with the operations of the Employer or of other contractors and no extension(s) of the defects liability period will be allowed for the execution of this Work.

Add the following sub-clause 49.5 to this Clause:-

52 <u>Variations</u>

52.1 Add the following final sentence to this sub clause:-

The agreement, fixing or determination of any rates or prices as aforesaid shall include any foreign currency and the proportion thereof.

52.4 <u>Daywork</u>

Add the following at the end of this sub-clause:

The Work so ordered shall immediately become part of the Works under the Contract. The Contractor shall, as soon as practicable after receiving the Daywork Order from the Engineer undertake the necessary steps for due execution of such Work. Prior to commencement of any work to be done on a Daywork basis, the Contractor shall give a notice to the Engineer stating the exact time of such commencement.

54 <u>Plant, Temporary Works and Materials</u>

Delete Sub-Clauses 54.3 to 54.4 entirely.

For the purpose of these Clauses, the term "Equipment" shall be read as "Contractor's Equipment" where the context so requires.

54.1 Line 5: - Add "written" between "the" and "consent".

<u>Quantities</u>

55.1 Delete sub-clause 55.1 and substitute with the following;

The quality and quantity of the Work included in the Contract Price shall be deemed to be that which is set out in the Contract Bills. The Bills, unless otherwise expressly stated therein, shall be deemed to have been prepared
in accordance with the principles of the latest edition of the Civil Engineering Standard Method of Measurement.

Any error in description or in quantity or any omission of items from the Contract Bills or Specifications shall not vitiate this Contract but shall be corrected and deemed to be a variation required by the Engineer. Subject to the foregoing, any error whether arithmetical or not in the computation of the Contract Price shall be deemed to have been accepted by the parties hereto.

The Contract Price shall not be adjusted or altered in any way whatsoever otherwise than in accordance with the express provisions of these Conditions.

55.2 Add as a new sub-clause:

"Items of Work described in the Bills of Quantities for which no rate or price has been entered in the Contract shall be considered as included in other rates and prices in the Contract and will not be paid for separately by the Employer.

<u>Measurement</u>

56.1 Delete sub clause 56.1 and replace with the following:-

The Contractor shall prepare and submit to the Engineer all necessary field notes and other records taken and computations made for the purpose of quantity measurements, of which the forms shall be approved by the Engineer, for the monthly progress payment under clause 60. The measurement of work quantities made by the Contractor shall be verified and certified by the Engineer based on the above-mentioned documents.

The Contractor shall furnish all personnel, equipment and materials to make such surveys and computations as necessary to determine the quantities of work performed. Unless otherwise prescribed in the specifications or the drawings, all measurements for payment shall be made by the dimensions, lines and grades as shown on the drawings or by direct survey of which the methods shall be approved by the Engineer.

The documents submitted for measurement and payment shall become the property of the Employer and shall be used to the extent necessary to determine the monthly progress payment to be made to the Contractor under the Contract. Direct survey, if done, shall be subject to checking and verification by the Engineer and all errors in the said survey work and related computations as found during such checking shall be immediately corrected by the Contractor.

57.1 Delete sub clause 57.1 and substitute with the following:-
The Works shall be measured net with deductions made in accordance with the principles of the latest edition of the Civil Engineering Standard Method of Measurement. All measurements shall be given in metric (SI) units.

Provisional Sums

58.4 **Prime Cost sum**

Wherever an item in the Bills of Quantities has been referred to as a "P.C. Sum" (Prime Cost Sum), that item shall be construed as a Provisional sum and the provisions of Sub-clauses 58.1 to 58.3 will apply.

59.5 Add the following paragraph at the end of sub clause 59.5:-

If the Engineer desires to secure final payment to any nominated sub-contractor before final payment is due to the Contractor and if such sub-contractor has satisfactorily indemnified the Contractor against any latent defects, the Engineer may, in an interim certificate, include an amount to cover the said final payment, and thereupon the Contractor shall pay to such nominated sub-contractor the amount so certified. Upon such final payment, the amount named in the Appendix to Form of Tender as Limit of Retention Money shall be reduced by the sum which bears the same ratio to the amount as does the subcontract and sub-contractor shall be discharged from all liability for the Work, materials or goods executed or supplied by such subcontractor under the Contract to which the payment relates.

Certificates and Payment

60.1 **Advance Payment**

In the event that an advance payment is granted, the following shall apply:-

a) On signature of the Contract, the Contractor shall at his request, and without furnishing proof of expenditure, be entitled to an advance of 10% (ten percent) of the original amount of the Contract. The advance shall not be subject to retention money.

b) No advance payment may be made before the Contractor has submitted proof of the establishment of deposit or of a directly liable guarantee satisfactory to the Employer in the amount of the advance payment. The guarantee shall be in the same currency as the advance.

c) Reimbursement of the advance shall be effected by deductions from monthly interim payments.

d) Reimbursement of the lump sum advance shall be made by deductions from the Interim payments and where applicable from the balance owing to the Contractor. Reimbursement shall begin when the amount of the sums due under the Contract reaches 20% of the original amount of the

Contract. It shall have been completed by the time 80% of this amount is reached.

The amount to be repaid by way of successive deductions shall be calculated by means of the formula:

$$R = \frac{A\,(x^{1} - x^{11})}{80 - 20}$$

Where:

R = the amount to be reimbursed

A = the amount of the advance which has been granted

X^{1} = the amount of proposed cumulative payments as a percentage of the original amount of the Contract. This figure will exceed 20% but not exceed 80%.

X^{11} = The amount of the previous cumulative payments as a percentage of the original amount of the Contract. This figure will be below 80% but not less than 20%.

(e) with each reimbursement the counterpart of the directly liable guarantee may be reduced accordingly.

60.2 **Interim Payment Certificate**

The Contractor shall submit to the Engineer, in the manner required by the Engineer after the end of each month a statement showing the estimated total value of permanent Work properly executed and materials or goods for permanent works brought to Site up to the end of the previous month (if the value shall justify the issue of an interim certificate) together with any adjustments under clause 70 and any outstanding claims and sums the Contractor considers may be due to him. The Contractor shall amend or correct his estimate as directed by the Engineer and the latter shall not accept it until he is satisfied that it is fair and reasonable. With respect to the said materials and goods, no payment for them shall be made unless ;-

(i) The materials are in accordance with the specifications for the Works;

(ii) The materials have been delivered to Site and are properly stored and protected against loss, damage or deterioration;

(iii) The Contractor's record of the requirements, orders, receipts and use of materials are kept in a form approved by the Engineer, and such records are available for inspection by the Engineer;

(iv) The Contractor has submitted a statement of his cost of acquiring and delivering the materials and goods to the Site, together with such documents as may be required for the purpose of evidencing such cost;

(v) The materials are to be used within a reasonable time.

The Contractor will be paid on the certificate of the Engineer the amount due to him on account of the estimated total value of the permanent Work executed up to the end of the previous month together with such amount (not exceeding 75% of the value) as the Engineer may consider proper on account of materials and goods for permanent Work delivered by the Contractor on Site and in addition, such amount as the Engineer
may consider fair and reasonable for any Temporary Works for which separate amounts are provided in the Bill of Quantities, all of which shall be subject to a retention of the percentage named in the Appendix to Form of Tender until the amount retained (hereinafter and in all Contract documents called the "Retention Money") shall reach the "Limit of Retention Money" named in the said Appendix. Provided always that no interim certificate shall be issued for a sum [such sum always being the net amount thereof after all deductions for retention etc) less than that named in the Appendix to Form of Tender as "Minimum Amount of Interim Certificate" at one time.

Within 14 days after receiving a statement from the Contractor as aforesaid, and subject to the Contractor having made such further amendments and corrections as the Engineer may require, the Engineer shall issue a Certificate of Payment to the Employer showing the amount due, with a copy to the Contractor.

The Engineer shall not unreasonably withhold certifying an Interim Payment Certificate and where there is a dispute regarding an item for payment, the Engineer may delete this disputed item from the Interim Payment Certificate and certify the remainder for payment provided the said payment is in accordance with the preceding paragraph. In cases of difference in opinion as to the value of any item, the Engineer's view shall prevail.

60.3 Final Account and Final Payment Certificate

As soon as possible after the issue of Taking - Over Certificate or the termination of the Contract and not later than the time of issue of Defects Liability Certificate, the Contractor shall prepare and submit to the Engineer (with a copy to the Employer), a Statement of Final Account showing in detail the total value of work done in accordance with the Contract together with all sums paid in previous payments. Within thirty(30) after receipt of such further information as may be reasonably required from the Contractor for its verification, the Engineer shall check the said statement, prepare and submit a Final Payment Certificate to the Employer (with a copy to the Contractor).

The Final Payment Certificate shall state;

(a) The (final) total value of all Work done in accordance with the Contract;

(b) After giving credit to the Employer for all amounts previously paid to the Contractor, the balance, if any, due from the Employer to the Contractor or the Contractor to the Employer, as the case may be.

Unless the Contractor notifies the Engineer of his objection to the Final Payment Certificate within twenty eight [28] days of delivery thereof , he shall be deemed to have agreed that he accepts the total Contract Price as set out in the Final Payment Certificate as full settlement for all work done under the Contract including any claims, variations and omissions thereof.

However, a Final Certificate of Payment shall not be conclusive:

a) to the extent that fraud or dishonesty relates to or affects any matter dealt with in the Certificate, or

b) if any arbitration or court proceedings under the Contract have been commenced by either party before the expiry of 84 days after the issue of the Final Certificate of Payment.

60.4 **Payment of Certificates**

Payment upon each of the Engineer's Certificates for Interim Payments shall be made by the Employer within the time stated in the Appendix to Form of Tender from the date of issue of each Certificate of Payment.

Payment upon the Engineer's Final Payment Certificate shall be made by the Employer within the time stated in the Appendix to Form of Tender from the date of issue of the Final Certificate of Payment signed by the Engineer and countersigned by the Contractor or his authorised agent or representative.

Making of a payment by the Employer shall be considered to have been duly executed on the day that the Employer has issued a cheque.

60.5 **Payment of Retention Money**

One half of the retention money shall become due upon the issue of a Taking – Over Certificate and shall be paid to the Contractor when the Engineer shall

certify in writing that the last section of the whole of the Works has been substantially completed and the other half shall be paid to the Contractor after the expiration of the Defects Liability Period and the issue of a Certificate under Clause 62. Provided always that if such time there shall remain to be executed by the Contractor any Works ordered during such period pursuant to Clauses 49 and 50 thereof ,the Employer

shall be entitled to withhold payment [until the completion of such Works] of so much of the second half of the Retention Money as shall in the opinion of the Engineer represent the Costs of the Works so remaining to be executed. Provided further that in the event of different Defects Liability Periods having become applicable to different parts of the Works pursuant to clause 48 hereof the expression "expiration of the Defect Liability Period" shall for the purpose of this Sub-clause be deemed to mean the expiration of the latest of such periods.

60.6 **Currency of Payment**

The Contract price shall be stated in Kenya Shillings. All payments to the Contractor shall be made in Kenya shillings and foreign currency(s) in the proportion indicated in the tender, or agreed prior to the execution of the Contract Agreement and indicated therein. The rate[s] of exchange for the calculation of the amount of foreign currency payment[s] shall be the rate of exchange indicated in the Tender. If the Contractor indicated foreign currencies for payment other than the currencies of the countries of origin of related goods and services, the Employer reserves the right to pay the equivalent at the time of payment in the currencies of the countries of such
goods and services. The Employer and the Engineer shall be notified promptly by the Contractor of any changes in the expected foreign currency requirements of the Contractor during the execution of the Works as indicated in the Statement of Foreign Currency Requirements and the foreign and local currency portions of the balance of the Contract Price shall then be amended by agreement between Employer and the Contractor in order to reflect appropriately such changes.

60.7 **Overdue Payments**

Unless otherwise stated in the appendix interest shall be paid on the overdue amounts and the interest to be paid shall be in accordance with prevailing commercial bank rates.

60.8 **Correcting and With-holding**

The Engineer may by any interim certificate or through the final account
make any correction or modification to any previous certified sum and shall have authority, if any work or part thereof is not being carried out to his satisfaction, to omit or reduce the value of such work in any Interim Payment Certificate.

60.9 **Completion by Sections.**

If a Taking-Over Certificate shall be issued for any section or part of the Works separately, the payments herein provided for on or after issue of such a Certificate shall be made in respect of such section or part and references to the Contract Price shall mean such part of the Contract Price as shall in the absence of agreement be apportioned thereto by the Engineer.

60.10 **Proportion of Foreign Currency**

Subject to the provision of sub clause 60.5 the proportion of foreign currency in any amount due to the Contractor or Employer shall be determined in the following manner:-

a) For all measured Work, the percentages of foreign currency for the appropriate section of the Bill of Quantities as stated in the schedule of foreign currency requirements shall be applied.

b) Variations in the cost of imported materials shall be paid in foreign currency.

c) Variations in the cost of locally purchased materials and those due to changes of legislation shall be paid in local currency.

d) For Day works labour and plant, the respective percentages of foreign currency stated in the schedule shall be applied.

e) For Day works materials and materials on site, payment in foreign currency will only be made for imported materials.

f) The provisions for the deduction and release of Retention Money and the payment of interest shall be applied similarly to both the local and foreign portions.

g) The advance mobilization loan, its repayment thereof and liquidated damages shall all be apportioned on the basis of the ration between local and foreign currency indicated in the Contract Price.

h) In the event that the payment is for an item not covered in the foregoing paragraphs, the Engineer shall determine the proportion of foreign and local currency based on the information given in the Schedule of Foreign Currency Requirements, together with any additional information he may request the Contractor to provide.

60.11 **Statement at Completion**

Not later than 14 days after the issue of the Taking-Over Certificate in respect of the whole of the works, the Contractor shall submit to the Engineer a statement at completion showing in detail, in a form approved by the Engineer;

(a) The final value of all work done in accordance with the Contract up to the date stated in such Taking-Over Certificate.

(b) Any further sums which the Contractor considers to be due; and

(c) An estimate of amounts, which the Contractor considers, will become due to him under the Contract.

Estimate amounts shall be shown separately in the Statement at Completion. The Contractor shall amend and correct the Statement as directed by the Engineer who shall issue a Certificate at Completion to be processed in accordance with sub-clause 60.4.

60.12 **Final Statement**

Not later than 56 days after the issue of the Defects Liability Certificate, the Contractor shall submit to the Engineer for consideration a draft final statement with supporting documents showing in detail, in the form approved by the Engineer;

(a) The final value of all work done in accordance with the Contract;

(b) Any further sums which the Contractor considers to be due to him.

If the Engineer disagrees with or cannot verify any part of the draft final statement, the Contractor shall submit such further information as the Engineer may reasonable require and shall make such changes in the draft as may be required.

60.13 **Discharge**

Upon submission of the Final Statement, the Contractor shall give to the Employer, with a copy to the Engineer, a written discharge confirming that the total of the Final Statement represents full and final settlement of all monies due to the Contractor arising out of or in respect of the Contract. Provided that such discharge shall become effective only after payment under the Final Payment Certificate issued pursuant to Sub-clause 60.14 has been made and the Performance Security referred to in Sub-clause 10.1 has been returned to the Contractor.

60.14 **Final Payment Certificate**

Upon acceptance of the Final Statement as given in Sub-clause 60.12, the Engineer shall prepare a Final Payment Certificate which shall be delivered to the Contractor's authorized agent or representative for his signature. The Final Payment Certificate shall state:

(a) The final value of all work done in accordance with the Contract;

(b) After giving credit to the Employer for all amounts previously paid by the Employer, the balance, if any, due from the Employer to the Contractor or the Contractor to the Employer as the case may be

Final Certificate shall be issued for any sum due to the Contractor even if such is less than the sum said named in the Appendix to the Form of Tender.

60.15 **Cessation of Employer's Liability**

Unless the Contractor notifies the Engineer of his objection to the Final Certificate within fourteen days of delivery thereof he shall be deemed to have agreed that he accepts the total Contract Price as set out in the Final Certificate as full settlement for all work done under the Contract including any variations and omissions thereof.

62.1 **Defects Liability Certificate**

Delete the last sentence of this Sub-Clause beginning "Provided that the issue……in Sub-Clause 60.3".

<u>Remedies</u>

63.4 **Assignment of Benefit of Agreement**

Add the following at the end of this sub-clause:-

"But on the terms that a supplier or sub-contractor shall be entitled to make any reasonable objection to any further assignment thereof by the Employer and the Employer may pay the supplier or sub-contractor for any such materials supplied or Works executed under such agreement, whether the same be assigned as aforesaid or not, before or after the said determination, the amount due by such arrangement in so far as it has not already been paid by the Contractor".

65 **Special Risks**

Add sub clause 65.9 as follows:

(a) In the event of the Employer unilaterally ordering the final cessation of performance of the Contract for reasons not specified elsewhere in the Conditions of Contract the Contract shall be considered to be frustrated and the Contractor shall be indemnified as provided for under clause 65.1.

(b) In the event of the Employer ordering the adjournment of the Contract before or after commencement of the Works for reasons not specified elsewhere in the Conditions of Contract, the Contractor shall be entitled to indemnity for any injury which he may have suffered as a consequence of such adjournment. The Engineer shall award the Contractor payment of such sum as in his opinion shall be reasonable giving regard to all material and relevant factors including the Contractor's on costs and overheads, and the nature of the instruction to adjourn the Contract.

<u>Settlement of Disputes</u>

67.3 **Arbitration**

For the purposes of this Clause, the Arbitrator shall be a person to be agreed between the parties or failing agreement, the Arbitrator shall be appointed by the appointer designated in the Appendix to the Form of Tender.

48

Add the following paragraph after the last paragraph of sub-clause 67.3:

Arbitration shall take place in Nairobi, Kenya. The language of all arbitration proceedings shall be in English. The cost of arbitration shall be apportioned by the Arbitrator according to his findings.

<u>Notices</u>

68.1 Add the following at the end of this subclause:-

Notwithstanding the foregoing, the Contractor shall either maintain an address close to the Works or appoint an agent residing close to the Works for the purpose of receiving notices to be given to the Contractor under the terms of the Contract. This obligation shall be terminated upon the issue of the Certificate of Completion.

68.2 Delete the words "nominated for that purpose in Part II of these Conditions" in this sub-clause.

Default of Employer

69.1 Default of Employer

In paragraph (a) of this Sub-Clause, delete the words "within 28 days of expiry of the time stated in Sub-clause 60.10" and insert "within 56 days after the expiry of the time stated in Sub-Clause 60.4".

69.4 Contractor's Entitlement to Suspend Work

Delete the first four lines of this Sub-Clause and replace with the following:-

"Without prejudice to the Contractor's entitlement to interest under Sub-clause 60.7 and to terminate his employment under Sub-Clause 69.1, the Contractor may, if the Employer fails to pay the Contractor the amount due under any certificate of the Engineer within 56 days after the expiry of the time stated in Sub-Clause 60.4….."

Delete sub-clause 69.4 (b) and substitute with the following----"the amount of such cost, which shall be added to the Contract Price. However, the costs due to idle time for plant, equipment and labour shall not be included in the said costs and shall be borne by the Contractor.

69.5 Resumption of Work

In line 3 of this Sub-Clause delete the Words "Sub-Clause 60.10" and replace with "Sub-Clause 60.7"

Changes in Cost and Legislation

70.1 Delete the sub-clause 70.1 in its entirety and substitute with the following:-

"The Contract Price shall be deemed to have been calculated in the matter set below and shall be subject to the adjustment in the event specified hereunder:

(a) The rates contained in the priced Bill of Quantities are based upon the rates of wages and other emoluments and expenses applicable at the site and the date of tender pricing (as defined in sub-clause 70.4 hereinafter);

(b) If the said rates of wages and other emoluments and expenses shall be increased or decreased by act, statue, decree, regulation and the like after the said date of tender pricing then the net amount of increase the emoluments and expenses shall, as the case may be, paid to or allowed by Contractor;

(c) The rates contained in the price Bill of Quantities are based upon the rates of the Contractor's compulsory contributions payable at the date of tender under or by virtue of any Act, Statue, Regulations and the like applicable at the site;

(d) If any of the said rates of contribution becomes payable after that date then the net amount of new statutory contribution becomes payable after that date then the net amount of increase or decrease of the emoluments and expenses shall, as the case may be, be paid to or allowed by the Contractor. Difference between what the Contractor actually pays in respect of work people engaged upon or in connection with the works and what he would have paid in respect of such person had any of the said rates not been increased or decreased or had a new contribution not become payable as aforesaid, shall as the case may be, be paid to or allowed by the Contractor. Provided always that the Engineer and the Contractor may agree a sum, which shall be deemed to be the net amount of the aforesaid difference, and such sum shall be deemed for the purpose of this Contract to be, that which is to be paid to or allowed by the Contractor by the virtue of this sub-paragraph;

(e) If the market price or any materials or goods specified as aforesaid shall be increased or decreased after the said Date of Tender Pricing, then the net amount of difference between the basic price and the market price payable by the Contractor and current when any such goods and materials are bought shall, as the case may be, be paid to or allowed by the Contractor. Orders for materials and goods listed as aforesaid shall have been placed within a reasonable time after the date at which sufficient information is available for the placing of such orders, and the placing of orders at that time shall be a condition precedent to any payments being made to the Contractor in respect of increased market prices."

Substitute and add the following sub-clauses:

70.2 (a) If the Contractor shall decide subject to Clause 4 thereof to sub-let any portion of the work he shall incorporate in the sub-contract provisions to the like effect as those contained in sub-clause (1) of this Clause;

(c) If the price payable under a sub-contract as aforesaid is increased above or decreased below the price in such sub-contract by reason of the operation of the incorporated provisions of sub-clause (1) of this clause then the net amount of such increase or decrease shall as the case may be, be paid to or allowed by the Contractor under this Contract.

70.3 The expression "the date of tender pricing" as used in this Clause means the date 28 days prior to the final date for submission of Tenders as determined by the Employer in the Tender documents.

70.4 For imported materials, the supplier's/manufacturer's Prime costs shall be C.I.F. cost at point of entry by the same means of transport as determined by the Contractor's Basic Rate.

For locally produced materials, the supplier's or manufacturer's prime costs shall be at their nearest depot or the nearest railway station relevant to the works.

For materials, which are subject to Government Price Control, payments for price variations will be determined from the difference between the control price in force at a date 28 days prior to date for submission of Tenders and the price in force on the date of purchase.

70.5 The materials to which this Variation Clause applies are:

- All bitumen material
- Fuels, oils and lubricant
- Cement
- Lime
- Flex beam guardrail
- Explosives
- Gabion mesh
- Reinforcing steel

70.6 The Contractor shall not change the supplier or manufacturer during the Contract without the approval of the Engineer.

70.7 No payments will be made for price variation related to expenses incurred by the Contractor in his Head Office in Kenya, or overseas.

70.8 All payments made pursuant to Clause 70 shall be in Kenya Shillings.

70.9 No payments will be made for the cost of preparing V.O.P. claims.

70.10 Add the following at the end of this clause.

"Notwithstanding the foregoing, such additional or reduced cost shall not be separately paid or credited as aforesaid if the same shall already have been taken into account in accordance with the provisions of sub-clause 70.1".

ADDITIONAL CLAUSES

Clause 73 Declaration Against Waiver

The condoning by the Employer of any breach or breaches by the Contractor or any authorized sub-contractor of any of the stipulations and Conditions contained in the Contract shall in no way prejudice or affect or be construed as a waiver of the Employer's rights, powers and remedies under the Contract in respect of any breach or breaches as aforesaid.

Clause 74 Bribery and Collusion

The Employer shall be entitled to determine the Contract and recover from the Contractor the amount of any loss resulting from such determination if the Contractor shall have offered or given or agreed to give any person any gift or consideration of any kind as an inducement of regard for doing or fore bearing to do or for having done or fore borne to do any action in relation to obtaining or the execution of the Contract or any other contract with the Employer or if any of the like acts shall have been done by any person employed by the Contractor or acting on his behalf (whether with or without the

knowledge of the Contractor) or if the Contractor shall have come to any agreement with another contractor or number of contractors whereby an agreed quotation or estimate shall be tendered to the Employer by one or more contractors.

Clause 75 Contract Confidential

The Contractor shall treat the Contract and everything in connection therewith as private and confidential. In particular, the Contractor shall not publish any information, drawings or photographs concerning the Works in any trade or technical paper etc, and shall not use the Site for the purpose of advertising except with the

written consent of the Engineer and subject to such conditions as the Engineer may prescribe.

Clause 76 Employer's Officials etc., Not Personally Liable

No official of the Employer or the Engineer or the Engineer's Representative or anyone of their respective staffs or their employees shall be in any way personally bound or liable for the acts or obligations of the Employer under the Contract or answerable for default or omission in the observance or performance of any of the acts, matters or things which are herein contained.

Clause 77 Taxes and Duties

(1) The Contractor shall list in his tender the plant and vehicles which he intends to import for the execution of the Works. The Engineer will consider the list in the context of the program of the Works and will give his approval subject to any modifications that he may see fit to make. No appeal against the Engineer's decision shall be permitted.

The Contractor will be permitted to import approved plant and vehicles required for the execution of the Works on the basis of temporary admission into Kenya and re-export thereafter upon completion of the Contract without payment of customs duties and Value Added Tax for them. If the plant and equipment shall not be re-exported, duties and taxes shall then be paid based upon their residual value at the date of completion of the Contract, or the date of withdrawal from the Works, if earlier. Plant and vehicles so imported shall not be utilized on other works not associated with the Contract unless specifically authorized by the Engineer.

(2) The Contractor will be permitted to import approved spare parts, tires and tubes without payment of customs duty and Value Added Tax for maintenance of any imported vehicles and plant as provided in sub-clause 77.1 above, within a financial limit indicated by himself. However, this limit will not exceed 15% of the Contract Price excluding Contingencies.

(3) All materials approved by the Engineer to be incorporated into the Works or temporary works, and whose importation into Kenya is agreed to be essential shall be free of customs duties and Value Added Tax. The Contractor shall submit a list of such materials required with the tender. The Contractor shall be required to satisfy the Engineer that such materials have actually been incorporated into the Works.

Items produced in Kenya will not be permitted to be imported without payment of customs duty and Value Added Tax.

Items produced in Kenya shall mean commercially recognized goods or products that are either mined, grown, manufactured, processed or assembled (whether the components are imported or not) in Kenya.

Clause 78 Joint Ventures

78.1 If the Contractor is a joint venture, all partners of the joint venture shall be jointly and severally liable to the Employer for the execution of the entire Contract in accordance with its terms and Conditions.

V) SPECIFICATIONS

Notes for preparing Specifications

1.0 Specifications must be drafted to present a clear and precise statement of the required standards of materials and workmanship for tenderers to respond realistically and competitively to the requirements of the Employer and ensure responsiveness of tenders. The Specifications should require that all materials, plant and other supplies to be incorporated in the permanent Works be new, unused, of the most recent or current models and incorporating all recent improvements in design and materials unless provided otherwise in the Contract. Where the Contractor is responsible for the design of any part of the permanent Works, the extent of his obligations must be stated.

2.0 Specifications from previous similar projects are useful and it may not be necessary to re- write specifications for every works contract.

3.0 There are considerable advantages in standardizing **General Specifications** for repetitive Works in recognized public sectors, such as highways, urban housing, irrigation and water supply. The General Specifications should cover all classes of workmanship, materials and equipment commonly involved in construction works, although not necessarily to be used in

a particular works contract. Deletions or addenda should then adapt the General Specifications to the particular Works.

4.0 Care must be taken in drafting Specifications to ensure they are not restrictive. In the specifications of standards for materials, plant and workmanship, existing Kenya Standards should be used as much as possible, otherwise recognized International Standards may also be used.

5.0 The Employer should decide whether technical solutions to specified parts of the Works are to be permitted. Alternatives are appropriate in cases where obvious (and potentially less costly) alternatives are possible to the technical solutions indicated in tender documents for certain elements of the Works, taking into consideration the comparative specialized advantage of potential tenderers.

The Employer should provide a description of the selected parts of the Works with appropriate reference to Drawings, Specifications, Bills of Quantities, and Design or Performance criteria, stating that the alternative solutions shall be at least structurally and functionally equivalent to the basic design parameters and Specifications.

Such alternative solutions shall be accompanied by all information necessary for a complete evaluation by the Employer, including drawings, design calculations, technical specifications, breakdown of prices, proposed construction methodology and other relevant details. Technical alternatives permitted in this manner shall be considered by the Employer each on its own merits and independently of whether the tenderer has priced the item as described in the Employer's design included with the tender documents

6.0 **Health Care and Welfare**

In addition to providing, equipping and maintaining adequate first aid stations throughout the works in accordance with the Laws of Kenya, the Contractor shall provide and maintain on Site during the duration of the Contract, a fully equipped dispensary. This shall be with a qualified Clinical Officer/Nurse who shall offer the necessary medical advice on AIDS/HIV and related diseases to the Engineer's and Contractor's Site staff. The Contractor shall allow for this in the rates and be responsible for all site welfare arrangements at his own cost

SECTION VI: SPECIFICATIONS, DRAWINGS AND BILLS OF QUANTITIES

I. SPECIFICATIONS

1.0 PROJECT DESCRIPTION.

PROJECT LOCATION

The road is located in Nkuene Ward, South Imenti Sub County.

SCOPE OF WORKS

The works specified under the contract includes all general and auxiliary works and work of any nature that is deemed to be necessary for the due and satisfactory construction, completion and maintenance of the named roads and within the road reserve
The major items of work included in the contract are

- General Office administration and Overheads.
- Site Clearance.
- Excavation and Filling for Structures.
- Culvert and Drainage Structures.
- Road Opening.
- Grading and gravelling works.

1.0 PROJECT SPECIFICATIONS.

Contents:

5-50-016: Small Element Paving Works – Excavations / Scarification

Excavation in soft and in hard material shall be carried out in accordance with Engineer's instructions. The Contractor shall ensure that all excavated depth is consistent with design depths to achieve intended finished levels.

Where existing ground requires scarification, water and compaction, the Engineer or his representative may instruct the Contractor to carry out the said works. The compaction levels shall achieve a minimum compaction level of 95% MDD in accordance with AASHTO T99. A 15 tonne drum roller shall be used.

The Contractor shall use appropriate / instructed equipment to carry out these works.

Work method: MB

Quality Control:

- All excavation depths to be confirmed by Survey.
- Compaction achieved to be checked by a Government-approved Materials Officer.
- Depth of scarification shall be 150mm
- Camber shall be checked with at 50m interval with a maximum tolerance of ±1%
- The longitudinal profile shall be checked after compaction of scarified surface to ensure smooth surface with no corrugations or depressions, with a tolerance of ±1%
- Compaction shall show no movement or heaving under roller, minimum 6 passes.
- Compaction tests standard shall be 95% MDD (AASHTO T99)

Unit of measurement: m^3

The measurement shall be by volume of excavated material and volume of scarified material.

Payment:

The unit rate shall be all-inclusive for full compensation for materials, machines, labour, incident costs and all taxes.

5-50-006: Fill Material

Fill in soft or hard material shall be carried out in accordance with Engineer's instructions.

Where existing ground requires a fill layer, the Engineer or his representative may instruct the Contractor to carry out the said works. The Fill material shall be pre-approved by the Engineer or his representative. The fill in layer shall be processed

with water and compaction to achieve a minimum compaction level of 95% MDD in accordance with AASHTO T99. A 15 tonne drum roller shall be used.
The Contractor shall use appropriate / instructed equipment to carry out these works.
Work method: MB
Quality Control:

- All fill depths to be confirmed by Survey.
- Compaction achieved to be checked by a Government-approved Materials Officer.
- Depth of fill shall be 150mm
- Camber shall be checked with at 50m interval with a maximum tolerance of ±1%
- The longitudinal profile shall be checked after compaction of fill material surface to ensure smooth surface with no corrugations or depressions, with a tolerance of ±1%
- Compaction shall show no movement or heaving under roller, minimum 6 passes.
- Compaction tests standard shall be 95% MDD (AASHTO T99)

Unit of measurement: m^3
The measurement shall be by volume of excavated material and volume of scarified material.
Payment:
The unit rate shall be all-inclusive for full compensation for materials, machines, labour, incident costs and all taxes.

12-50-012 Hand-packed stone
The Contractor shall provide, lay and compact hand-packed stone layer including filling in voids with approved fine-grained aggregate / dust. The stone used shall be non-porous and be packed in a single layer unless the thickness of the stone layer exceeds 300mm. the Contractor shall then compact the layer using a 15T drum roller until the layer undergoes final settlement.
Work method: LB / MB
Quality Control:

- All stone to be non-porous and arranged in a single layer and closely packed in vertical, elongated pieces.
- Fine aggregates / stone dust to be spread only after go-ahead by the Engineer or his representative.
- Camber shall be checked with at 50m interval with a maximum tolerance of after stone dust layer±1%

- There shall be minimum 6 passes by the 15T roller and hand-packed stones must be firm.

Unit of measurement: m^3
The measurement shall be by volume of stone-packed material.
The unit rate shall be all-inclusive for full compensation for materials, machines, labour, incident costs and all taxes.

23-50-001 paving blocks

The Contractor shall provide, lay and compact paving blocks of approved thickness and strength (minimum cube-crushing test of 49 N/mm^2) in accordance with BS 6717 PART 1 of 1986.
Work method: LB / MB
Quality Control:

- Paving blocks to have a sample taken to materials labs for cube-crushing tests.
- Paving blocks to have fine aggregate to cover spaces between the blocks.
- Camber shall be checked with at 50m interval with a maximum tolerance of ±1%
- Paving blocks to be compacted using appropriate portable plate compactor, minimum 4 passes.

Unit of measurement: m^2
The measurement shall be by area of paving blocks laid and compacted.
The unit rate shall be all-inclusive for full compensation for materials, machines, labour, incident costs and all taxes.

BILL 01: PRELIMINARY AND GENERAL ITEMS

Scope:

This bill comprises those items that are required at the Commencement and Completion of the Works or that are Provisional Items applicable for the duration of the Works.

01-50- 001 Mobilization and Establishment of the Site

The Contractor shall provide all equipment, tools, materials, temporary offices, stores and housing required to carry out the Works.

The Contractor shall ensure that all possible means of protection are given to the labour force at all times. Such protection shall include provision of high visibility

clothing or vests, goggles and masks for workers in potentially dangerous locations or dealing with potentially harmful materials. The Contractor shall also maintain first aid kits with a minimum of the following items:-

Non Stick wound dressing
Selection of plaster/band aids
Crepe bandages
Gauze and cotton wool
Antiseptic solution (washing wounds)
Antiseptic cream – Betadine, Burnol
Pain killers Panadol, Asprin
Anti diarrhoea – Immodium, Diadis, Charcoal
Anti histamine – Piriton, Triludan
Anti nausea – Stemetil
Eye ointment
Oral re-hydration sachets
Surgical gloves

Measurement and Payment: NA

01-60- 001 Contract Supervision

Provisional sum available for the Engineer for expenses incurred for supervising the contract such as allowances, casual wages and transportation within the project area.

Measurement and Payment:

Provisional Sum: Payable by the Contractor to the Engineer through certification as directed by the Engineer. No mark up is included in this item.

Work Method: NA

01-60- 002 Clearance on Completion

On Completion of the Works, all temporary housing, equipment, signs and tools shall be removed from the site, and the site left in good order to the satisfaction of the Engineer.

Measurement and Payment

The Lump Sum payment will be made upon approval by the Engineer that the Clearance has been satisfactorily carried out.

Work Method: NA

01-60-003 Insurance

The Contractor shall provide Insurance in accordance with the Conditions of Contract as indicated in the Appendix to form of tender for Rehabilitation and Improvement Contracts and Clause 14.1 for small works conditions of contract.

Measurement and Payment

Lump Sum payment for this item will be made upon the production of satisfactory evidence by the Contractor that Insurances have been affected.

Work Method: NA

01-60-004 Quality Control Tests

The Engineer may instruct the Contractor during the progress of the Works to carry out quality control tests to check materials and standards of workmanship, against the Specifications.

Where such tests indicate defective standards the Engineer shall instruct the Contractor to rectify the defects to the Engineer's satisfaction and at the Contractor's expense.

The Engineer shall include a Provisional Sum for this item to be expended only as and when the Contractor is instructed to carry out tests at approved material testing laboratories.

Measurement and Payment

Reimbursable item based on actual costs incurred by the contractor including sampling, transportation and testing.

Work Method: NA

01-60-005 Publicity Sign Boards

The Contractor shall provide Sign Boards as specified on the Drawings or as directed by the Engineer. The Sign Boards shall be placed at the beginning and end of the road or road bill covered by this Contract.

Sign Boards shall be maintained for the duration of the Works, and removed on completion.

Quality Control

The Engineer shall check that Sign Boards have been erected in accordance with Drawings and Specifications.

Measurement: Number

The unit of measurement shall be number of Sign Boards erected

Payment

The unit rate shall be the full compensation for labour, tools, materials and incidental costs required for carrying out the work.

Work Method: N

01-60- 006 Drinking Water

The Contractor shall provide safe drinking water on site for workers at a reasonable distance from all work locations, for the duration of the Works.

Quality Control

The Engineer shall check regularly that adequate supplies of water are available throughout the Site.

Measurement and Payment

A Lump Sum shall be paid on a Monthly basis upon the approval of the Engineer that adequate supplies have been provided.

Work Method: LB

01-60-007 Provision of site sanitation facilities

The Contractor shall provide sanitation facilities on site for workers at a reasonable distance from all work locations, for the duration of the Works. This can be in the form of shallow pit latrines that are appropriately covered. All shallow pit latrines shall be filled in after the end of use.

01-60-004 Quality Control Tests

The Engineer may instruct the Contractor during the progress of the Works to carry out quality control tests to check materials and standards of workmanship, against the Specifications.

Where such tests indicate defective standards the Engineer shall instruct the Contractor to rectify the defects to the Engineer's satisfaction and at the Contractor's expense.
The contractor when instructed shall carry out tests at approved material testing laboratories.

Measurement and Payment

It is deemed that the contractor shall include all costs for material testing in his rates and therefore no separate payments shall be made.

Work Method: NA

01-60-005 Publicity Sign Boards

The Contractor shall provide Sign Boards as specified on the Drawings or as directed by the Engineer. The Sign Boards shall be placed at the beginning and end of the road or road bill covered by this Contract.

Sign Boards shall be maintained for the duration of the Works, and removed on completion.

Quality Control

The Engineer shall check that Sign Boards have been erected in accordance with Drawings and Specifications.

Measurement: Number

The unit of measurement shall be number of Sign Boards erected

Payment

The unit rate shall be the full compensation for labour, tools, materials and incidental costs required for carrying out the work.

Work Method: N

01-60- 006 Drinking Water

The Contractor shall provide safe drinking water on site for workers at a reasonable distance from all work locations, for the duration of the Works.

Quality Control

The Engineer shall check regularly that adequate supplies of water are available throughout the Site.

Measurement and Payment

A Lump Sum shall be paid on a Monthly basis upon the approval of the Engineer that adequate supplies have been provided.

Work Method: LB

01-60-007 Provision of site sanitation facilities

The Contractor shall provide sanitation facilities on site for workers at a reasonable distance from all work locations, for the duration of the Works. This can be in the form of shallow pit latrines that are appropriately covered. All shallow pit latrines shall be filled in after the end of use.

BILL 04: SITE CLEARANCE

Scope

This bill covers the clearance of bushes, shrubs, grasses, trees, stumps, boulders, stripping and grubbing of the topsoil, removal of anthills and other unsuitable materials for the specified widths of the road, quarry and borrow areas. The distinction between light and heavy bush shall be decided by the Engineer.

The minimum site clearing widths for each of the activities shall be as shown in Table

4.1

Table 4.1: Site Clearing Widths

Road Category	Running Surface	Stripping and Grubbing	Trees, Stumps,	Bush Clearing

			Boulders	
A/B/C + Secondary Roads	6.0 m	10.6 m	10.6 m	14.0 m
D/E + Minor Roads	5.4 m	10.0 m	10.0 m	13.0 m
RAR Roads	4.5 m	7.9 m	8.0 m	11.0 m
Minor / RAR roads with insufficient widths or Temporary sections	3.5 m	6.9 m	7.0 m	9.0 m

04-50-003 Bush Clearing (Heavy)

Where the Engineer designates an area as Heavy Bush (based on the undergrowth density) the Contractor shall clear all vegetation including small trees, shrubs and undergrowth, **and their root systems**, and shall salvage any re-useable timber or other material by cutting into logs and stacking. Other cleared material shall be collected and disposed of off-site as directed by the Engineer.

This activity shall be carried out as either Machine Based or as Labour Based as defined in the Bills of Quantity or as instructed by the Engineer.

Work Method: **LB or MB**

Quality Control

The Engineer shall check the cleared widths at 50 metre intervals

Measurement Unit: m^2

The measurement shall be the area cleared to the specified width over the length as instructed by the Engineer.

Payment:

The unit rate shall be the full compensation for all labour, tools, equipment and incidental costs required to complete the work.

04-50-004 Bush Clearing (Light)

The Contractor shall clear all vegetation including small trees, and shrubs with **their root systems**. Grasses and any undergrowth shall be cut to a height of not more than 100mm. The cleared material shall be collected and disposed of away from the side drains and in a manner that causes no visibility obstruction to traffic.

This activity shall be carried out as either Machine Based or as Labour Based as defined in the Bills of Quantity or as instructed by the Engineer.

Work Method: **LB or MB**

Quality Control

The Engineer shall check the cleared widths at 50 metre intervals.

Measurement Unit: m^2

The measurement shall be the area cleared to the specified width over the length as instructed by the Engineer.

Payment:

The unit rate shall be the full compensation for all labour, tools and incidental costs required to complete the work.

04-50-006 Trees and Stumps Removal (200-450mm girth)

Trees and Stumps outside the construction width but within the road reserve having a trunk girth of between 200-450mm at a point 600mm above the ground shall only be removed on the instruction of the Engineer.

The Contractor shall excavate around any trees to be removed to a depth not less than 0.5 m before cutting the roots. Existing stumps shall be uprooted in the same manner. All holes left by the removal of trees and stumps shall be back-filled with approved material and compacted to existing ground level. Cut material and stumps shall be collected and disposed of as directed by the Engineer. Burning of waste material shall not be permitted.

Work Method: **LB**

Quality Control

The Engineer shall approve the removal, backfilling and satisfactory disposal of all waste material.

Measurement Unit: No

The measurement shall be the number of trees and stumps removed.

Payment

The unit rate shall be the full compensation for all labour, tools and incidental costs required to complete this item.

04-50-007 Trees and Stump Removal (>450mm girth)

All the requirements of item 04-50-003 shall apply for trees and stumps greater than 450mm

girth. In addition any re-useable timber from trees removed shall be cut into logs not more than 1.5 metres long and stacked as directed by the Engineer.

Work Method: **LB**

Quality Control

The Engineer shall approve the removal, backfilling and satisfactory disposal of all waste material.

Measurement Unit: No

Measurement shall be the number of trees and stumps removed

Payment:

The unit rate shall be the full compensation for all labour, tools, equipment and incidental costs required to complete this item.

BILL O5: EARTHWORKS

This bill covers the excavation of soil and the placing, watering and compaction of hard and soft material to form the road formation.

05-50-004 Excavation to Level and Compaction

The Contractor shall cut material to form the level road platform and place the excavated material as fill or in spoil areas approved by the Engineer. Where material needs to be borrowed excavation shall only be from borrow areas approved by the Engineer.

The fill layers to be compacted shall not exceed 150mm loose depth.
Compaction of the fill material shall be carried out from the edges to the centre by overlapping passes of the compaction equipment. The number of passes shall be as directed by the Engineer dependent upon the equipment used and the material being compacted. Unless otherwise instructed the moisture content of the material shall be within $\pm$ 2% of optimum. Where additional moisture is required water shall be applied in an even manner such that no longitudinal or transverse flow occurs.

The Engineer may instruct the Contractor to carry out density tests on the compacted material to ensure that an acceptable standard has been achieved.

The Contractor shall use **Labour** and appropriate compaction **Equipment** to carry out this item of work.

Work Method: **LB - MB**

Quality Control

The width of the platform shall be checked at intervals of 50 m and shall have a tolerance of ±50mm.
The level platform shall be horizontal in the transverse direction and shall have a tolerance of ±15 mm under a 2 metre straight edge.
The longitudinal profile shall have a maximum tolerance of ±50 mm over a 30m length of gradient.
Compaction shall show no movement of material under the roller - minimum of 6 passes.
Compaction test standard shall be 95% MDD (AASHTO T99)

Measurement Unit: m^3

The measurement shall be the volume of compacted fill material forming the level platform.

Payment

The unit rate shall be the full compensation for labour, tools, equipment, water and incidental costs required for carrying out the work.

05-50-006 Fill in soft material and compact.
05-50-007 Fill in hard material and compact.
05-50-008 Cut to spoil in soft material.
05-50-009 Cut to spoil in hard material.
05-50-010 Cut to fill in soft material.
05-50-011 Cut to fill in hard material.
05-50-012 Rock to fill to swamp
05-50-013 Filter to swamp under, over and around rock fill

These activities should be done in accordance with Bill 5, sub clauses 5.01 to 5.17 in the Standard Specifications for Roads and Bridges 1986.

SECTION 07: EXCAVATION AND FILLING FOR STRUCTURES

Scope

This section covers all Works in connection with the excavation for concrete pipe culverts; inlet and outlet structures; drifts and drainage protection Works;

07-50- 002 Excavation for Drainage Structures

The Contractor shall excavate trenches for culverts; foundations for head walls, wing walls; inlet and outlet aprons and other drainage structures to the dimensions and levels shown on the Drawings or as directed by the Engineer. The excavations shall

be kept free of water and shall be compacted with hand rammers of not less than 5kg.

The Engineer shall approve all excavations before the Contractor shall be permitted to proceed with the construction.

The Contractor shall take all necessary precautions to safeguard the stability and safety of the excavations.

Work Method

The Contractor shall apply Labour methods to carry out this item.

Quality Control

- The dimensions of the excavations shall have a tolerance of + / - 50mm
- The invert levels shall have a tolerance of + / - 50mm
- The trench bottom gradients shall have a tolerance of + / - 20mm over the length of the trench

Measurement Unit m3

The measurement shall be volume of material excavated measured net according to the Drawings.

Payment

The unit rate shall be the full compensation for labour, tools, and any incidental costs required for carrying out the work.

07-50-003: Side-drain Excavation (Soft Material)

The Contractor shall excavate side drains to the profiles shown on the Drawings or as directed by the Engineer.

The material from the excavations shall be used for the formation of the camber. Where additional material is required to achieve the required camber, the widths of the side drains may be increased, with the approval of the Engineer.

Locations of the side drains shall be as shown on the Drawings or as directed by the Engineer, and the Contractor shall use the appropriate ditch template to control the excavations

Work method

The Contractor shall apply Labour methods to carry out this item

Quality Control

- The dimensions of the side drains shall be checked at 50m intervals and shall have a tolerance of + 50mm
- The longitudinal profile of the side drains shall be checked at 30m intervals and shall have a tolerance of +/-50mm.

Measurement Unit m3

Measurement shall be the volume of material excavated to form the side drains, and deposited for camber formation.

Payment

The unit rate shall be the full compensation for labour, tools and incidental costs required for carrying out the work.

07-50-004 Side-drain Excavation (Hard material)

Where, in the opinion of the Engineer, the material to be excavated to form the side drains may be classified as hard the Contractor shall carry out the excavation in accordance with 05-003 and shall be compensated under this item,

Work Method:

The Contractor shall apply Labour methods with appropriate Equipment to carry out this item.

Quality Control:

The Engineer shall measure the volume of the excavation classified as Hard material

Measurement Unit: m3

The measurement shall be the volume of material excavated and deposited to form the camber

Payment:

The unit rate shall be the full compensation for all labour, tools, equipment and incidental costs required to complete the work.

07-50- 005 Mitre Drains/Catchwater Drains

i. Labour ii. Equipment

The Contractor shall excavate mitre drains and catchwater drains to the dimensions shown on the Drawings and at locations as directed by the Engineer. They shall be excavated in a manner to minimise erosion at the discharge point. The material excavated from the drains shall be used to form the side drain bund directing water to the mitre-drain, and a bund on the lower side of the cut-off drain, or disposed of as directed by the Engineer.

Work Method

The Contractor shall use either Labour or Equipment as directed by the Engineer to carry out this work.

Quality Control

- The longitudinal profile shall have a gradient of maximum 4%.
- The dimensions of the mitre drains shall have maximum tolerances of +20mm
- The location of the mitre drains shall be approved by the Engineer.

Measurement Unit: m3

The measurement shall be the volume of material excavated as measured on site in approved drains.
Payment

The unit rate shall be full compensation for labour, tools, equipment and incidental costs required for carrying out the work.

SECTION 08: CULVERT AND DRAINAGE WORKS

Scope

This section covers all Works in connection with the installation of concrete pipe culverts; inlet and outlet structures; drifts and drainage protection Works; and the construction of Scour Checks

08-60-001/005: Culvert Cleaning (partially blocked)

08-60-001 300mm dia
08-60-002 450mm dia
08-60-003 600mm dia
08-60-004 900mm dia
08-60-005 1200 mm dia

This activity involves the cleaning of culverts of specified sizes including pipe barrels, the outlet/inlet structures, and the outlet drains, keeping them free of all debris, weed, silt and any obstruction to ensure free passage of water at all times. The debris shall be deposited in approved spoil dumps as directed by the Engineer

Partially blocked culverts shall be those with less than half of the barrel blocked.

Correct widths and slopes of the outlet drains shall be maintained. The gradient of the outlet drain shall be not less than 2 %.

All broken culvert barrels discovered in the course carrying out this activity shall be reported to the Engineer.

This activity shall be carried out before the rains, or as directed by the Engineer.
Work Method

The Contractor shall use Labour to carry out this item of work
Quality Control

The culverts shall be checked as free of debris to the satisfaction of the Engineer.

Measurement Unit: m

The measurement shall be the length of culvert, including the outlet drain, cleaned

Payment

The unit rate shall be full compensation for labour, tools and incidental costs required to carry out the work.

08- 60 - 006/7/8/9/10 : Culvert Cleaning (Fully blocked):

08 - 60 - 006 300mm dia;
08 - 60 - 007 450mm dia;
08 - 60 - 008 600mm dia;
08 - 60 - 009 900mm dia;
08 - 60 - 010 1200mm dia

This activity involves the cleaning of culverts of specified sizes including pipe barrels, the outlet/inlet structures, and the outlet drains, keeping them free of all debris, weed, silt and any obstruction to ensure free passage of water at all times. The debris shall be deposited in approved spoil dumps as directed by the Engineer

Fully blocked culvert shall be those with greater than half of the barrel blocked.

Correct widths and slopes of the outlet drains shall be maintained. The gradient of the outlet drain shall be not less than 2 %.

All broken culvert barrels discovered in the course of carrying out this activity shall be reported to the Engineer.

This activity should be carried out before the onset of the rains, or as directed by the Engineer.

Work Method
The Contractor shall use Labour to carry out this item of work.

Quality Control

The culverts shall be checked as free from debris, to the satisfaction of the Engineer.

Measurement Unit: m

The measurement shall be the length of culvert, including the outlet drain cleaned.

Payment

The unit rate shall be full compensation for labour, tools and incidental costs required to carry out the work.

08-60-016/035 Concrete Pipe Culverts

08-60-016	300	mm	haunched	(Type II)
08-60-017	300	mm	unhaunched	(Type 1)
08-60-018	450	mm	haunched	(Type II)
08-60-019	450	mm	unhaunched	(Type 1)
08-60-020	600	mm	haunched	(Type II)
08-60-021	600	mm	unhaunched	(Type I)
08-60-022	900	mm	haunched	(Type II)
08-60-023	900	mm	unhaunched	(Type I)
08-60-024	1200	mm	haunched	(Type II)
08-60-025	1200	mm	unhaunched	(Type I)
08-60-026	300	mm	semi-surround	(Type III)
08-60-027	300	mm	surround	(Type IV)
08-60-028	450	mm	semi-surround	(Type III)
08-60-029	450	mm	surround	(Type IV)
08-60-030	600	mm	semi-surround	(Type III)
08-60-031	600	mm	surround	(Type IV)
08-60-032	900	mm	semi-surround	(Type III)
08-60-033	900	mm	surround	(Type IV)

08-60-034	1200	mm	semi-surround	(Type III)
08-60-035	1200	mm	surround	(Type IV)

The Contractor shall supply, lay and joint concrete pipes to form culverts, including the concrete bedding; haunching or surrounds; and backfilling, in accordance with the Drawings for the Type and diameter specified in the Contract or directed by the Engineer.

The pipes shall be of Class 20/20 concrete, at least 28 days cured, and manufactured on site or procured from a supplier approved by the Engineer. The pipes shall be laid on a bedding of Class 15/20 concrete of dimensions as shown on the Drawings and jointed with cement mortar 1:4.

The culvert gradient including the outlet shall be a minimum 2%.

The pipes shall be haunched or surrounded, according to the Type specified, with Class 15/20 concrete to the dimensions shown on the Drawings or as directed by the Engineer.

Backfilling shall be carried with approved material and compacted in layers not exceeding 150 mm loose depth and placed evenly on each side of the pipe. Ramps shall be shaped to achieve a minimum overfill of 75% of the pipe diameter, and shall be tapered back on the carriageway to provide a gradual approach, as directed by the Engineer.

If the Contractor wishes to construct culverts in-site, using inflatable or collapsible forms the Engineer's approval shall first be sought for the proposed working method.

On completion the inside of the culvert shall be smooth, without displaced joints or other obstructions and true to line and level.

Work Method

The Contractor shall use Labour and appropriate Equipment to carry out this item work

Quality Control

- Concrete quality shall be checked for cracks, honey combing, and other defects.
- Before the pipes are laid, the gradient of the concrete bedding shall be checked and shall not be less than 2%
- The joints shall be checked to see that they have been properly made.

Measurement Unit: m

The measurement shall be in linear metres of the installed Type and size of culvert specified, measured net according to the Drawings.

Payment

The unit rate shall be the full compensation for labour, tools, materials, equipment and any other incidentals that may be required in carrying out the work.

08- 70- 001 Head Wall Repair - Masonry

This activity involves the repairs to damaged head walls and wing walls built in masonry.

Where directed by the Engineer, the masonry walls shall be inspected and loose or missing stone re-secured or replaced. Damaged pointing shall be repaired with cement mortar 1:4 and finished flush with the stonework.

Work Method

The Contractor shall use Labour to carry out this item of work

Quality Control

- The stability of the walls and the pointing shall be to the satisfaction of the Engineer.

Measurement Unit: No

The measurement shall be the number of walls repaired as directed by the Engineer.

Payment

The unit rate shall be full compensation for labour, materials, tools, and incidental costs required to carry out the work.

08-70-002 Headwall Repair - Concrete

The activity involves the repairs to damaged concrete headwalls and wingwalls, and to inlet/outlet concrete aprons. Concrete walls shall be inspected and repair works carried out as instructed by the Engineer to include breaking out and replacement of

damaged concrete with similar material, and the rendering of open texture areas with cement mortar 1:4. Broken wall sections shall be re-built in 20/20 (1:2:4) concrete within formwork erected on the correct lines and levels in accordance with the Standard Drawings. Areas of new concrete and mortar shall be protected from direct sunlight and kept moist for 3 days.

Quality Control

The work shall be carried out to the satisfaction of the Engineer.

Measurement Unit: No

The measurement shall be the number of walls/aprons repaired.

Payment

The unit shall be full compensation for labour, materials, tools, and incidental costs required to carry out the work.

08-80- 002 : Gabions

The Contractor shall provide and install Gabions as retaining walls and anti-erosion structures at locations shown on the Drawings or as directed by the Engineer.

Gabions shall include mattresses and boxes and for purposes of construction, measurement and payment, no distinction shall be made between them.

Gabions shall be 'Maccaferi" boxes or 'Reno' matresses or equivalent approved by the Engineer.

The surfaces on which the Gabions are to be laid prior to being filled with rock shall be levelled to the depths and dimensions shown on the Drawings or as directed by the Engineer.

Gabion boxes shall be tied together with 3 mm galvanised binding wire securing all edges at 150mm intervals.

Work Method

The Contractor shall use Labour to carry out this item.

Quality Control

The placing and tying of the Gabions shall be approved by the Engineer before filling commences.

Measurement Unit: No

The measurement shall be the number of Gabion boxes installed.

Payment

The unit rate shall be the full compensation for labour, materials, and any incidental item costs necessary to carry out the work.

08-80-003 : Rockfill to Gabions

The Contractor shall provide selected rock, crushed if necessary, and carry out the packing and compacting of the rock inside the Gabion boxes.

The boxes shall be filled in layers from the sides towards the middle in an interlocking stone matrix to prevent deformation and bulging. The interior and top layers of the boxes shall be hand packed with smaller stone to form a tightly compact structure and rammed in place. Care shall be taken to ensure that each layer of boxes is filled evenly and to a level surface before the next course of boxes is placed.

Work method

The Contractor shall use Labour to carry out this activity.

Quality Control

The filling and compaction of the stones in the Gabion boxes shall be approved by the Engineer.

Measurement Unit m^3

Rockfill to Gabions shall be the volume of Gabions filled.
Payment

The unit rate shall be the full compensation for labour, tools, materials and incidental costs required for carrying out the work.

SECTION 10: GRADING AND GRAVELLING

Scope:

Grading covers the work of reinstating the road carriageway to the correct camber by removing the high points and filling gullies, corrugations, and wheel ruts to restore a smooth running surface.

Grading can either be done by labour (Manual Reshaping) or by Machine (Motorized grading or towed grading).

Manual reshaping is preferable where there is sufficient labour. For existing roads with side drains light manual reshaping should be used as defined in 10-50-004. Heavy manual reshaping should be used for roads that have deteriorated to such an extent that the drains and carriageway need to be re-instated. Heavy Manual Reshaping is defined under Bill 5 – Earth Works.

Light grading is carried out on good and fair roads as a maintenance activity while heavy grading is for re-establishing a road in poor or very poor condition.

Gravelling consists of the excavation; loading, hauling, dumping, spreading and compacting using approved equipment of gravel wearing course material on the formation of the road carriageway. Gravel shall include lateritic gravel, quartzitic gravel, calcareous gravel, decomposed rock, soft stone coral rag, clayey sand and crushed rock.

The material may be obtained from quarries, borrow pits or excavation in cuttings as directed by the Engineer. Gravel material shall conform to the requirement given in Table 10.1

Table 10.1: Requirement for Gravel Wearing Course

GRADING REQUIREMENTS	
Sieve (mm)	% by Weight Passing
40	100
28	95 – 100
20	85 – 100
14	65 – 100
10	55 – 100
5	35 – 92
2	23 – 77
1	18 – 62
0.425	14 – 50
0.075	10 – 40

For "Quarry Waste" gravel stones of maximum dimension 80mm may be permitted

PLASTICITY INDEX REQUIREMENTS PI		
Zone	Min	Max
WET: Mean annual rainfall > 500mm	5	20
DRY: Mean annual rainfall	10	30

BEARING STRENGTH REQUIREMENTS		
Traffic VPD	CBR	DCP Equivalent mm/Blow
>15	20	11
<15	15	14
CBR at 95 % MDD, Modified AASHTO and 4 days soaking		
Lower quality material (CBR 15) may be accepted if no better material can be found		

The Engineer shall approve quarries and the extent of their exploitation. The possible quarries shall be shown to the Contractor prior to commencement of the Works. The Contractor shall be responsible for the acquisition of the quarry rights and shall conduct respective negotiations with landowners and affected communities.

Alternative sources of gravel material whose quality can be shown to be in compliance with the specification requirements may be used, with the approval of the Engineer. The Contractor is deemed to have included in his rates for the provision of the gravel material.

10-50-001: Heavy Grading without watering and compaction.

Heavy grading without watering and compaction shall only be done when there is sufficient moisture in the material and the material can be compacted by traffic.

The Contractor shall scarify the existing carriageway surface, cutting high spots and moving materials to fill potholes, corrugations and wheel ruts and reshape the surface to the specified camber, using a Motor grader unless otherwise directed by the Engineer. All loose rocks, roots and grasses shall be removed first and disposed of well clear of the drains.

Pegs 300 to 400mm long shall be placed at 20 m intervals to mark edge of the carriageway.

The material shall be graded toward the centre of the road starting from both edges until the specified camber is achieved. Suitable material from the side drains may be used as additional material. Any further material needed to achieve the correct camber shall be from an approved source.

No grading shall be carried out in dry conditions.

The Contractor shall use **Equipment** to carry out this item.

Work Method: **MB**

Quality Control

- The width of the carriageway shall be checked at every 50m intervals and have a tolerance of + 50mm or -20mm.

- The camber shall be checked with a camber board at 25m intervals and shall have a tolerance of $\pm$ 1%

Measurement Unit: m^2

The measurement shall be the area of carriageway graded, measured net according to the specified width and measured length graded.

Payment

The unit rate shall be the full compensation for labour, tools, equipment and incidental costs required for carrying out the work.

10-50-002: Heavy Grading with watering and compaction.

The Contractor shall scarify the existing carriageway surface, cutting high spots and moving materials to fill potholes, corrugations and wheel ruts and reshape the surface to the specified camber, using a Motor grader unless otherwise directed by the Engineer. All loose rocks, roots and grasses shall be removed first and disposed of well clear of the drains.

Pegs 300 to 400mm long shall be placed at 20 m intervals to mark edge of the carriageway.

The material shall be bladed toward the centre of the road starting from both edges until the specified camber is achieved. Suitable material from the side drains may be used as additional material. Any further material needed to achieve the correct camber shall be from an approved source. Compaction shall be carried out using appropriate equipment approved by the Engineer, from the carriageway edges to the centerline in overlapping passes.

In order to achieve the desired compaction water shall be added in an even manner without transverse or longitudinal flow.

The Contractor shall use **Equipment** to carry out this item.

Work Method: **MB**

Quality Control

- The width of the carriageway shall be checked at every 50m intervals and have a tolerance of + 50mm or -20mm.
- The camber shall be checked with a camber board at 25m intervals and shall have a tolerance of ± 1%
- Longitudinal levels shall be checked with a straight edge of minimum 2.7 m length. Maximum tolerance of ± 10 mm.
- Compaction shall show no movement of material under the roller, minimum of 6 passes.
- Compaction test standard shall be 95% MDD (AASHTO T99)

Measurement Unit: m^2

The measurement shall be the area of carriageway graded, measured net according to the specified width and measured length graded.

Payment

The unit rate shall be the full compensation for labour, tools, equipment and incidental costs required for carrying out the work.

10-50- 004: Carriageway Grading - Light Grading

Light grading shall only be done when there is sufficient moisture in the material. The Contractor shall grade the carriageway to control roughness and corrugations using either a Towed or a Motor grader. The width of the carriageway shall be as specified for the Road Class.

Pegs 200 to 300mm long shall be placed at 20 m intervals to mark edge of the carriageway

The material shall be bladed toward the centre of the road, starting from both edges, to the specified camber. Where instructed by the Engineer, suitable materials from the side drains may be used to fill potholes and gullies in the carriageway. Any further material needed to re-form the camber shall be from an approved source. Compaction shall be achieved using the wheels of the equipment, tracked evenly over the full surface, or by other approved means.

No grading shall be carried out in dry conditions.

The Contractor shall use **Equipment** to carry out this item.

Work Method: **MB**

Quality Control

- The width of the carriageway shall be checked at every 50m intervals and have a tolerance of +50mm or -20mm

- The camber shall be checked with a camber board at 25m intervals and shall have a tolerance of ± 1%
- Longitudinal levels shall be checked with a straight edge of minimum 2.7 m length. Maximum tolerance of ±10 mm.

Measurement Unit: m^2

The measurement shall be the area of carriageway graded, measured net according to the specified width and measured length graded.

Payment

The unit rate shall be the full compensation for labour, tools, equipment and incidental costs required for carrying out the work.

10-50- 004: Light Manual Reshaping (Grub edge, fill gullies and Reshape carriageway)

This activity involves trimming the edge of the carriageway, grubbing grass from the carriageway filling gullies and ruts on the carriageway and reshaping of the camber of the road to the original standard and shape. No grass shall be grubbed from the shoulders, but it shall be cut to a maximum height of 50mm.

For earth roads materials from the side drains may be used to reshape the carriageway and fill gullies. Where additional suitable material is required to reinstate the camber to the required shape, this material shall be obtained from approved sources nearest to the final deposition area.

For gravel roads the gravel shall be obtained from the stacks placed at intervals along the road for this purpose if applicable.

The fill material shall be watered, mixed and compacted using suitable tampers to a finished level 25mm above the surrounding road surface.

This activity shall be carried out before and after the rains, or as directed by the Engineer.

The Contractor shall apply **Labour** methods to carry out this item.

Work Method: **LB**

Quality Control

- The width of the carriageway including the shoulders shall be checked at 100m intervals with tolerance of +50mm or -20mm
- The camber shall be checked using camber board at 50m intervals and shall have a tolerance of ± 1%
- The quality of fill material shall be approved by the Engineer
- The minimum compaction to be applied to fill areas shall be such that no rammer imprint on the surface shall be seen.

Measurement Unit: m^2

The measurement shall be the area of carriageway shaped.

Payment

The unit rate shall be the full compensation for labour, tools and incidental costs required for carrying out the work.

10-60-001: Provide Gravel Wearing Course (Excavation, Free haul, spreading and Compaction of Gravel)

Excavation of Gravel

Gravel shall be excavated from quarries approved by the Engineer, and the Contractor shall inform the Engineer if the quality/availability of the gravel changes during the course of excavation.

Stones and boulders with one dimension greater than 80mm shall be removed from the excavated gravel and deposited outside the quarry at locations approved by the Engineer. Such stones and boulders may be reused in other parts of Works with the approval of the Engineer.

Excavation and loading shall normally be by labour unless, at the request of the Contractor, the Engineer allows the use of equipment.

The Contractor shall use **Labour** and/or **Equipment** to carry out this work, as directed by the Engineer.

Work Method: **LB or MB**

Quality Control:

- Oversize stones and boulders shall not be loaded for haulage to the road.
- Areas containing deleterious material shall not be excavated.

Free haul, spreading and Compaction of Gravel

Free haul involves the transportation of gravel material for the first 1.5 km from the quarry. The Contractor shall spread and compact gravel material, in a manner to ensure a uniform thickness of the layer across the full width of the carriageway and shaped to the specified camber. Spreading also includes the removal of any oversized stones or boulders, which cannot be broken down to the required size, to spoil dumps. Gravel shall be spread within 24 hours of off-loading.

Compaction of the gravel material shall be carried out from the carriageway edges to the centerline by overlapping passes of the compaction equipment. The number of passes shall be as directed by the Engineer dependent upon the equipment used and the material being compacted. Unless otherwise instructed the moisture content of the material shall be within $\pm$ 2% of optimum

Where additional moisture is required water shall be applied in an even manner and the rate of application shall be such that no transverse or longitudinal flows occur.

The Engineer may instruct the Contractor to carry out density tests on the compacted material to ensure that an acceptable standard has been achieved.

The Contractor shall use Equipment for haulage and **Labour** for spreading unless the Engineer instructs otherwise.

Work Method: **LB-MB**

Quality Control:

- The gravel surface width shall be checked at 100m intervals and shall have a tolerance of ±50mm
- Trial holes shall be dug as directed by the Engineer to check the gravel thickness and shall have a tolerance of + 5mm / - 0mm
- The camber shall be checked at 50m intervals and the maximum tolerance shall be ±1 %
- The longitudinal profile shall be checked after the compaction of each load to ensure a smooth surface with no corrugations or depressions, tolerance of ± 10mm.
- Compaction shall show no movement of material under the roller, minimum of 6 passes.
- Compaction test standard shall be 95% MDD (AASHTO T180)

Measurement Unit: m^3

The measurement shall be the volume of compacted gravel surfacing measured net according to the Drawings and shall include the excavation and the 1.5km 'free' haul distance

Payment

The unit rate shall be the full compensation for labour, tools, equipment and incidental costs required for carrying out the work.

10-60- 002: Haulage (Overhaul beyond 1.5km)

The Contractor shall haul by appropriate equipment and off-load on the road as directed by the Engineer. Where the quantity delivered in any load falls short of the equipment capacity, off-loading shall only be permitted after the agreed spacing is adjusted accordingly.

No vehicle with a capacity of greater than 10 tonnes shall be permitted to off-load gravel directly on the prepared formation unless approved by the Engineer. Any greater loads shall be dumped in stockpiles off-road and transported to the formation areas by appropriate means.

Where loads supplied are found to contain material other than from the approved quarry and are of unacceptable quality, the Contractor shall remove them from site at the Contractor's expense.

The Contractor shall use **Equipment** to carry out this Item.

Work Method: **MB**

Quality Control:

- No haulage equipment shall be used until its capacity has been ascertained by the Engineer
- The quality of gravel dumped on the road shall be according to the Specifications
- The quantity of material delivered in each load shall be checked before dumping is allowed
- The distance between the stacks shall be checked to ensure the required compacted thickness will be achieved.

Measurement Unit: m^3km (Overhaul)

The Contractor shall allow in the rates for item 10-60-001 for a 'free' haul distance of 1.5km. The 'overhaul' shall be the distance, greater than 1.5km, to the centre point of the section where the gravel is being dumped and processed, measured along the shortest route as determined by the Engineer.

The measurement of overhaul shall be the product of the volume of the gravel hauled and the distance to the centre point as indicated above.

Payment

The unit rate shall include full compensation for labour, tools, equipment, and incidental costs necessary to carry out the work.

10-60-004 Gravel Patching (Excavation, Free haul, Spreading and Compaction of Gravel)

Excavation of Gravel

Gravel shall be excavated from quarries approved by the Engineer, and the Contractor shall inform the Engineer if the quality/availability of the gravel changes during the course of excavation.

Stones and boulders with one dimension greater than 80mm shall be removed from the excavated gravel and deposited outside the quarry at locations approved by the Engineer. Such stones and boulders may be reused in other parts of Works with the approval of the Engineer.

Excavation and loading shall normally be by labour unless, at the request of the Contractor, the Engineer allows the use of equipment.

The Contractor shall use **Labour** and/or **Equipment** to carry out this work, as directed by the Engineer.

Work Method: **LB or MB**

Quality Control:

- Oversize stones and boulders shall not be loaded for haulage to the road.
- Areas containing deleterious material shall not be excavated.

Free haul, preparation, spreading and Compaction of Gravel

Free haul involves the transportation of gravel material for the first 1.5 km from the quarry. The Contractor shall prepare the area to be patched by removing excessive water and loose material. The contractor shall then dump, spread and compact gravel material, in a manner to ensure a uniform thickness of the layer across the full width of the carriageway and shaped to the specified camber. Spreading also includes the removal of any oversized stones or boulders, which cannot be broken down to the required size, to spoil dumps. Gravel shall be spread within 24 hours of off-loading.

Compaction of the gravel material shall be carried by overlapping passes of the compaction equipment. The number of passes shall be as directed by the Engineer dependent upon the equipment used and the material being compacted. Unless otherwise instructed the moisture content of the material shall be within ± 2% of optimum

Where additional moisture is required water shall be applied in an even manner and the rate of application shall be such that no transverse or longitudinal flows occur.

The Engineer may instruct the Contractor to carry out density tests on the compacted material to ensure that an acceptable standard has been achieved.

The Contractor shall use Equipment for haulage and **Labour** for spreading unless the Engineer instructs otherwise.

Work Method: **LB-MB**

Quality Control:

- The gravel surface width shall be checked at 100m intervals and shall have a tolerance of ± 50mm
- Trial holes shall be dug as directed by the Engineer to check the gravel thickness and shall have a tolerance of + 5mm / - 20mm
- The camber shall be checked at 50m intervals and the maximum tolerance shall be ± 1 %
- The longitudinal profile shall be checked after the compaction of each load to ensure a smooth surface with no corrugations or depressions, tolerance of ± 10mm.
- Compaction shall show no movement of material under the roller, minimum of 6 passes.
- Compaction test standard shall be 95% MDD (AASHTO T180)

Measurement Unit: m^3

The measurement shall be the volume of compacted gravel surfacing measured net according to the Drawings and shall include the excavation and the 1.5km 'free' haul distance

Payment

The unit rate shall be the full compensation for labour, tools, equipment and incidental costs required for carrying out the work.

10-70-001: Site clearance of borrow area.

This activity should be done in accordance with Bill 4, sub clauses 4.01 to 4.05 in the Standard Specifications for Roads and Bridges 1986.

10-70-002: Removal of Overburden

The Contractor shall remove overburden from quarries and borrow pits, which includes excavation, loading, hauling and stockpiling at approved locations. The thickness of the overburden layer to be removed shall be determined from trial pits dug on a 30 metre grid within the quarry area.

The overburden shall be deposited neatly for re-use to reinstate the quarry on completion of the Works, as directed by the Engineer.

The Contractor shall use **Labour** to carry out this item unless the Engineer instructs otherwise.

Work Method: **LB or MB**

Quality Control

- The location and manner of stock piling of the overburden for the reinstatement of the quarry shall be to the approval of the Engineer.

Measurement Unit: m^3

The measurement shall be the volume of overburden removed as calculated from the cleared area and the mean depth indicated from the trial pits.

Payment

The unit rate shall include full compensation for labour, tools materials and equipment, haulage, stockpiling and incidental costs required for carrying out the work.

10-70-003: Restoration of Quarries and Borrow Pits

The Contractor shall level the ground, return the topsoil from the stockpiles, and uniformly spread the material over the full excavation area. Adequate drainage provisions shall be made to protect the excavation areas, and where necessary appropriate protection measures shall be taken to avoid erosion of the spread topsoil layer. Grass and trees shall be replanted as directed by the Engineer.

The Contractor shall use **Labour** and/or **Equipment** to carry out this item as agreed by the Engineer.

Work Method: **LB, LM-MB**

Quality Control

The Engineer shall check that the required measurements have been satisfactorily taken.

Measurement and Payment: Provisional Sum

Payment shall be made on a Dayworks basis for the labour and equipment as directed by the Engineer.

DRAWINGS

C-11

SECTION A-A

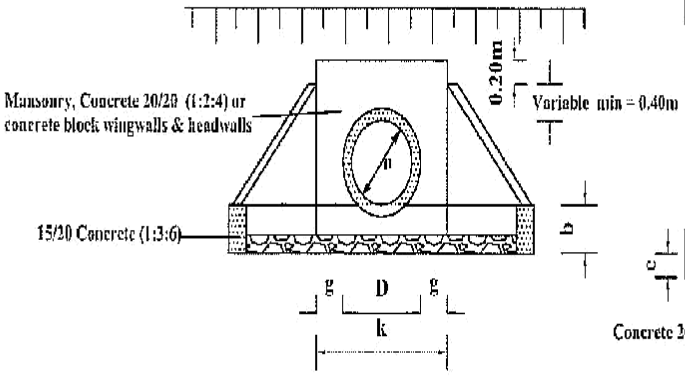

SECTION B-B

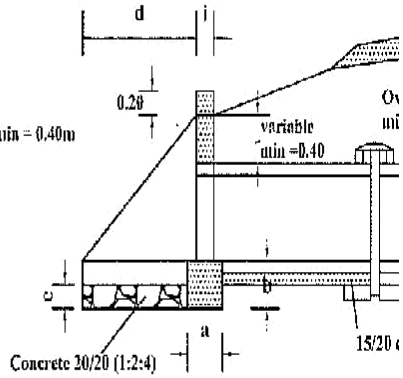

PLAN

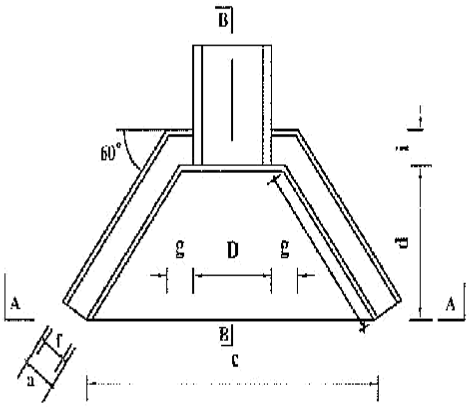

CULVERT TYPES	
X-SECTION WIDTH m	No. of pipes
4.50	6
5.50	7
6.50	8

PIPE DIAMETER IN M		TYPE A and C CONCRETE BL	
		450	600
DIMENSION	UNIT		
a FOUNDATION	m	0.30	0.30
b FOUNDATION	m	0.30	0.30
c FOUNDATION	m	2.20	2.35
d APRON	m	1.00	1.00
e APRON	m	0.20	0.20
f WALL	m	0.20	0.20
g WALL	m	0.30	0.30
h WALL	m	1.15	1.15
i WALL	m	0.20	0.20
k APRON	m	1.05	1.20
MATERIAL REQUIREMENT			
FOUNDATION (concrete)	m3	0.30	0.32
HEAD/WINGWALLS (Conrete/Masonry)	m3	0.42	0.49
APRON (concrete)	m3	0.33	0.36

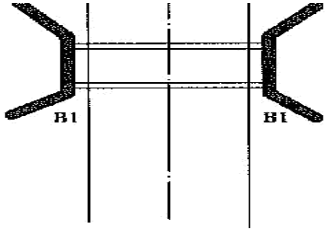

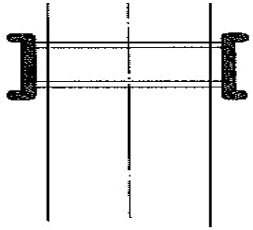

TYPE 2(ENTRY ONLY)

TYPE 4(ENTRY AND EXIT ON ACCESS)

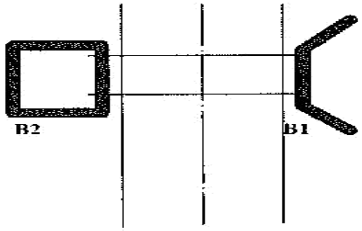

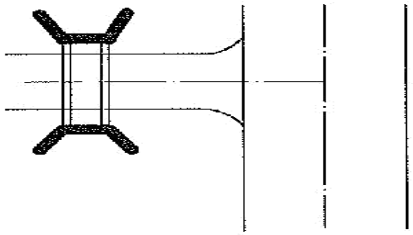

NOTE

1. The code numbers specify the shape and function and the code letter denotes the material;

A =Concrete block
B =Stone masonry
C =Concrete

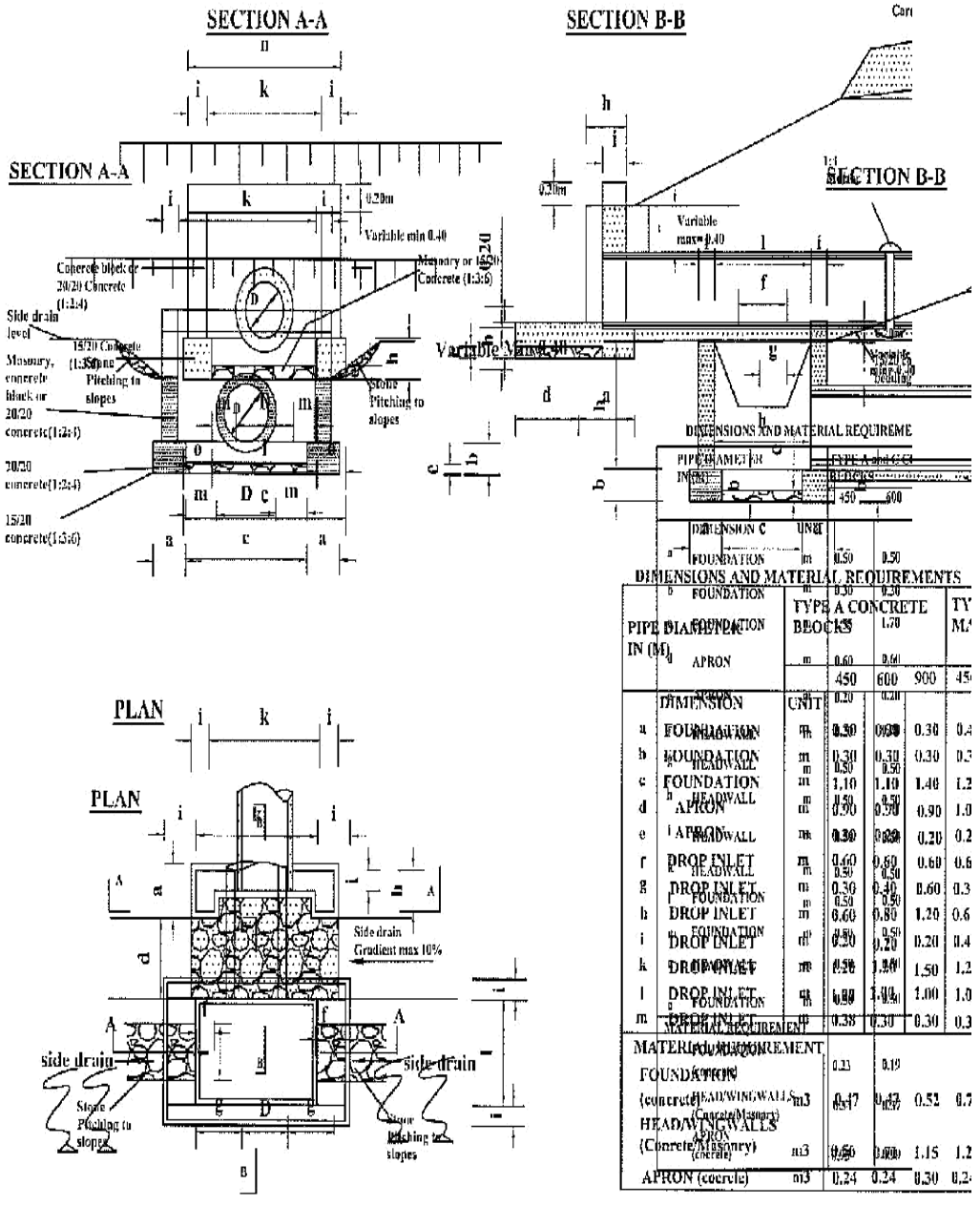
SECTION A-A
SECTION B-B
PLAN
Side drain level
Masonry, concrete block or 20/20 concrete(1:2:4)
20/20 concrete(1:2:4)
15/20 concrete(1:3:6)
Concrete block or 20/20 Concrete (1:2:4)
Masonry or 15/20 Concrete (1:3:6)
Stone Pitching to slopes
Variable min 0.40
Variable max 0.40
Side drain Gradient max 10%
side drain
DIMENSIONS AND MATERIAL REQUIREMENTS
PIPE DIAMETER IN (M)
TYPE A CONCRETE BLOCKS
DIMENSION
UNIT
FOUNDATION
HEADWALL
APRON
DROP INLET
MATERIAL REQUIREMENT
HEADWINGWALLS (Concrete/Masonry)
APRON (concrete)

C-12

C-13

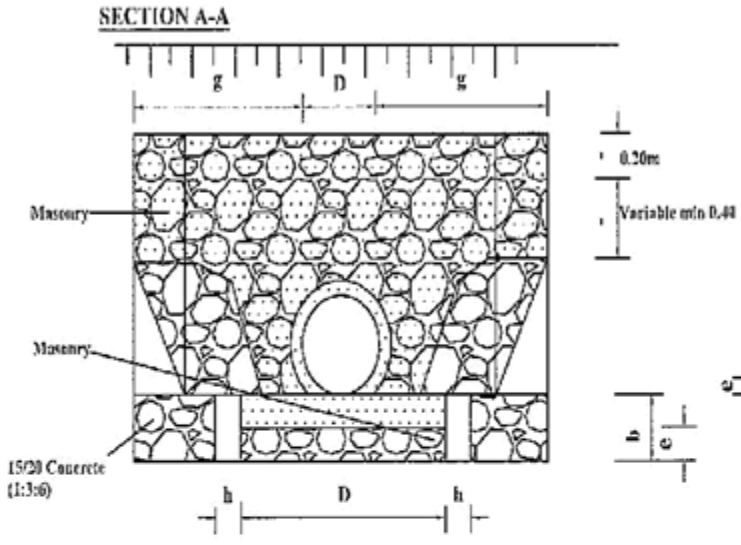

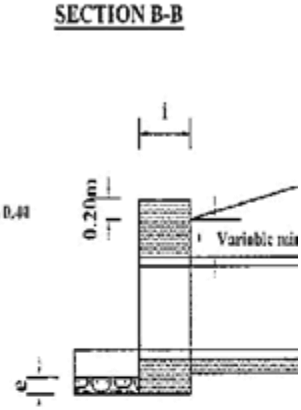

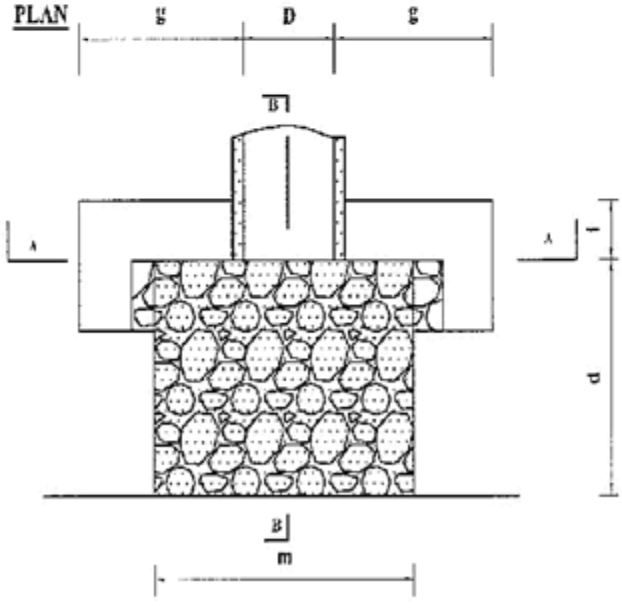

DIMENSIONS AND

PIPE DIAMETER (M)	
DIMENSION	
a	FOUNDATIO
b	FOUNDATIO
c	FOUNDATIO
d	APRON
e	APRON
f	HEADWALL
g	HEADWALL
h	HEADWALL
i	HEADWALL
m	FOUNDATIO
MATERIAL REQU	
	FOUNDATIO (concrete)
	HEAD/WING (Concrete/Mas
	APRON (concrete)

C-14

SECTION A-A

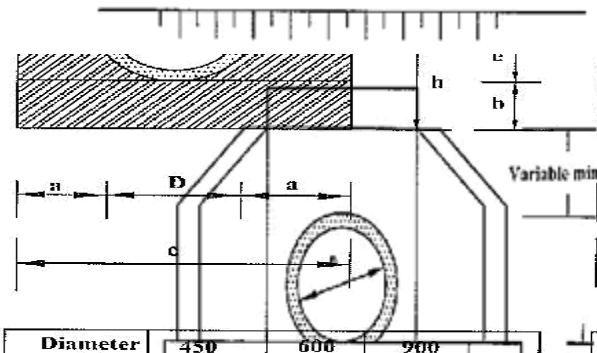

SECTION B-B

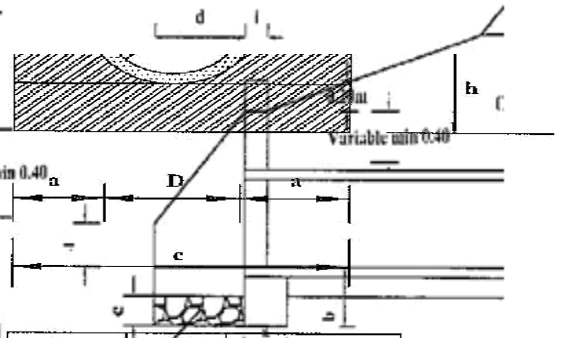

Diameter (D)	450 (mm)	600 (mm)	900 (mm)
a	0.15	0.20	0.20
b	0.10	0.15	0.15
c	0.86	1.12	1.48
d	0.56	0.72	1.08
e	0.14	0.18	0.27
f(min)	0.34	0.45	0.68
g	-	-	-
h	0.24	0.33	0.42
i	-	-	-
Concrete	Volume in (m3/m)		
Class 15/20	0.24	0.24	0.24
Application	-Fair subgrade condition -Overfill > 75% of the pipe diameter -Seasonal water flow only		
Remarks	Material for back/overfill shall be approved by the Engineer		

450 (mm)	600 (mm)	900 (mm)
0.15	0.20	0.20
0.10	0.15	0.15
0.86	1.12	1.48
0.56	0.72	1.08
0.28	0.36	0.54
0.34	0.45	0.68
-	-	-
0.38	0.51	0.69
-	-	-
Volume in (m3/m)		
0.20	0.37	0.56
-Fair to poor subgrade condition -Overfill > 75% of the pipe diameter -Seasonal water flow only		
Material for back/overfill shall be approved by the Engineer		

TYPE A (CONCRETE BLOCKS)		
450	600	900
0.20	0.20	
0.30	0.30	
1.34	1.49	
0.60	0.60	
0.20	0.20	
0.20	0.20	
0.10	0.10	
0.69	0.69	
0.20	0.20	
0.60	0.60	
0.40	0.40	

MATERIAL REQUIREMENT		
FOUNDATION (concrete blocks)	0.18	0.20
HEADWINGWALLS (Concrete/Masonry)	0.30	0.32
APRON (concrete)	0.12	0.14

C-16

C-15

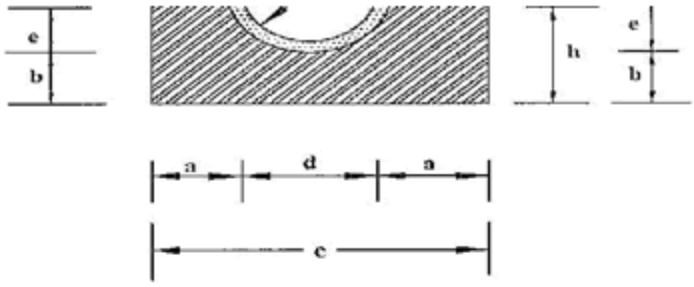

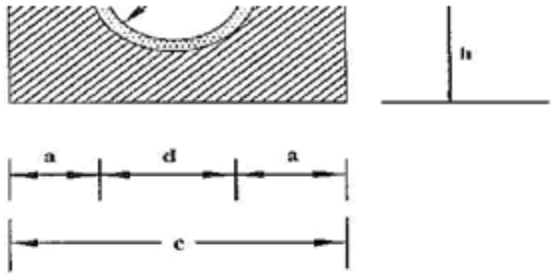

Diameter (D)	450 (mm)	600 (mm)	900 (mm)	450 (mm)	600 (mm)	900 (mm)
a	0.15	0.20	0.20	0.15	0.20	0.20
b	0.10	0.15	0.15	0.10	0.15	0.15
c	0.86	1.12	1.48	0.86	1.12	1.48
d	0.56	0.72	1.08	0.56	0.72	1.08
e	0.42	0.54	0.81	0.46	0.52	0.78
f(min)	0.23	0.3	0.45	0.15	0.15	0.15
g	-	-	-	0.15	0.15	0.15
h	0.52	0.69	0.96	0.81	1.02	1.38
i	-	-	-	0.28	0.35	0.45
Concrete	Volume in (m3/m)			Volume in (m3/m)		
Class 15/20	0.26	0.47	0.71	0.37	0.61	0.92
Application	-Fair subgrade condition -Overfill > 75% of the pipe diameter -Seasonal water flow only			-Fair to poor subgrade condition -Overfill > 75% of the pipe diameter -Seasonal water flow only		
Remarks	Material for back/overfill shall be approved by the Engineer			Material for back/overfill shall be approved by the Engineer		

C-17

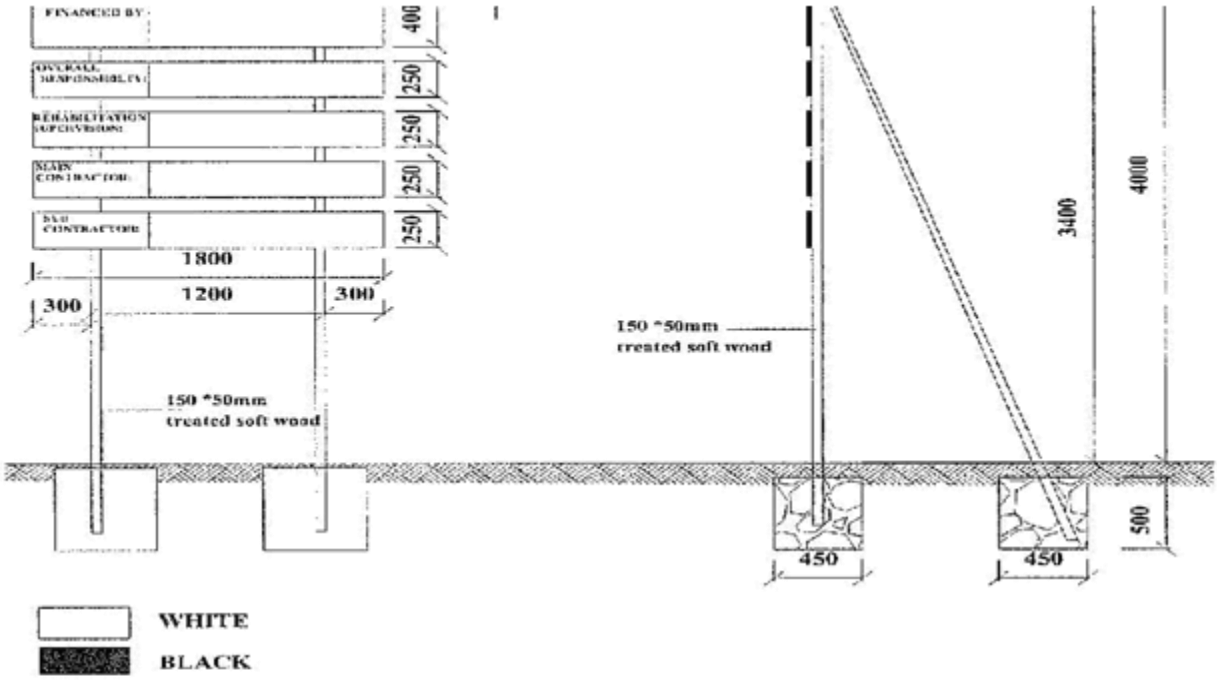

NOTES

1. The wording of the project sign board and the location to be as directed by the Engineer.
2. Materials to be used for fabrication of signboard shall be pressure impregnated treated softwood timber
3. Wording board posts to be attached to the posts with galvanised nails
4. Project board posts and struts to be embedded in concrete class 20/20(1:2:4)

C-23

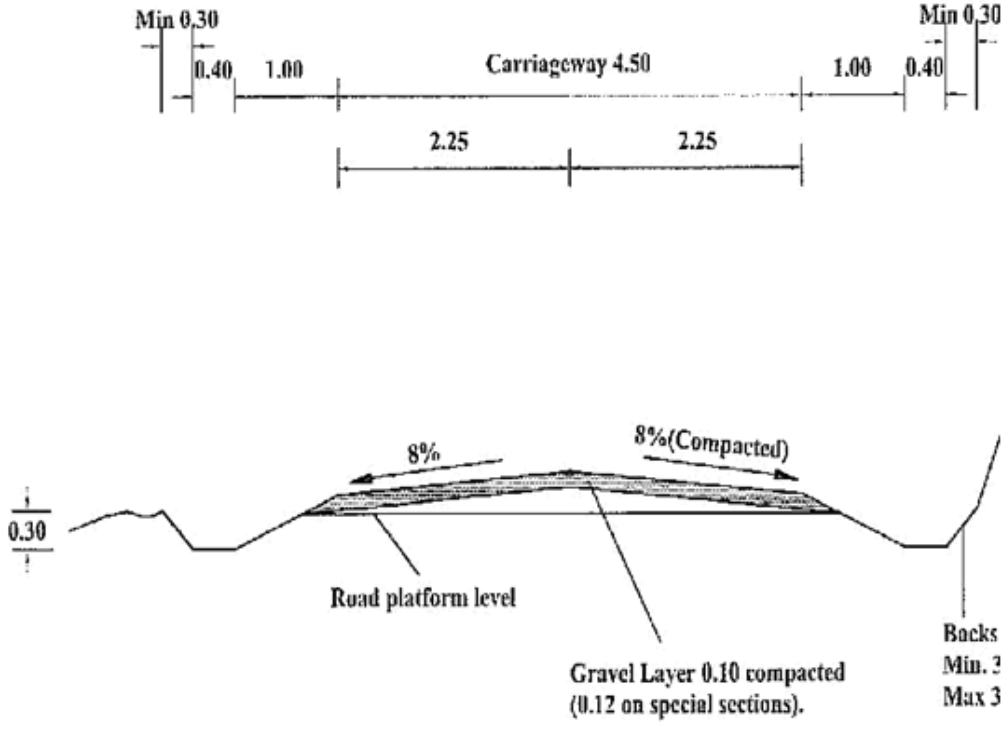

Notes:
1.All dimensions in metres
2.Gravel thickness may be increased as directed by the Engineer

C-2

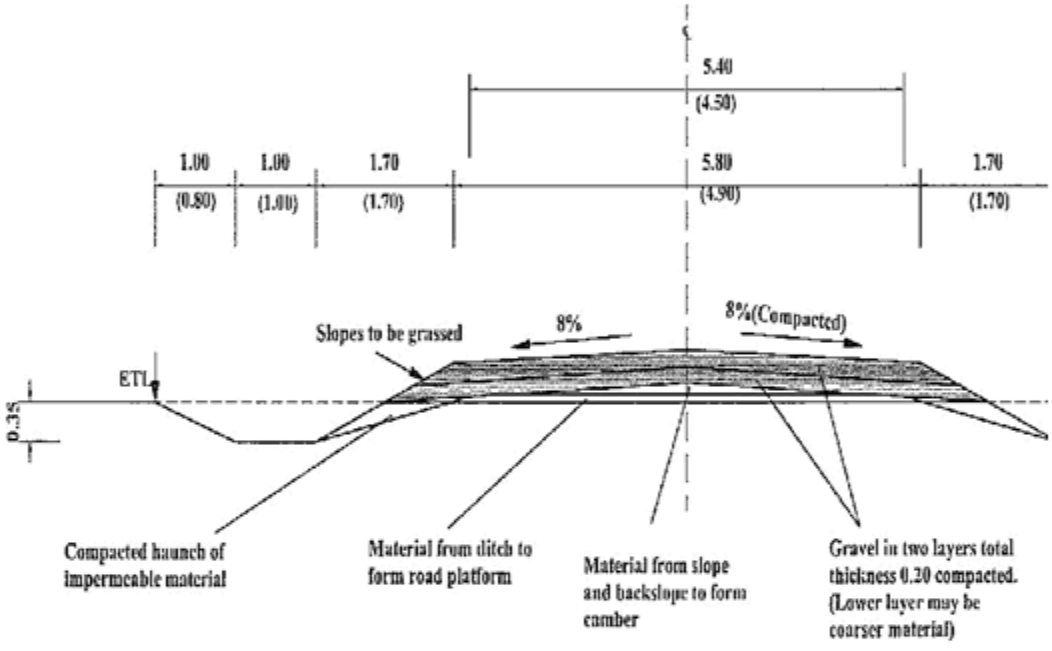
5.40
(4.50)
1.00
(0.80)
1.00
(1.00)
1.70
(1.70)
5.80
(4.90)
1.70
(1.70)
Slopes to be grassed
8%
8%(Compacted)
ETL
0.35
Compacted haunch of impermeable material
Material from ditch to form road platform
Material from slope and backslope to form camber
Gravel in two layers total thickness 0.20 compacted. (Lower layer may be coarser material)

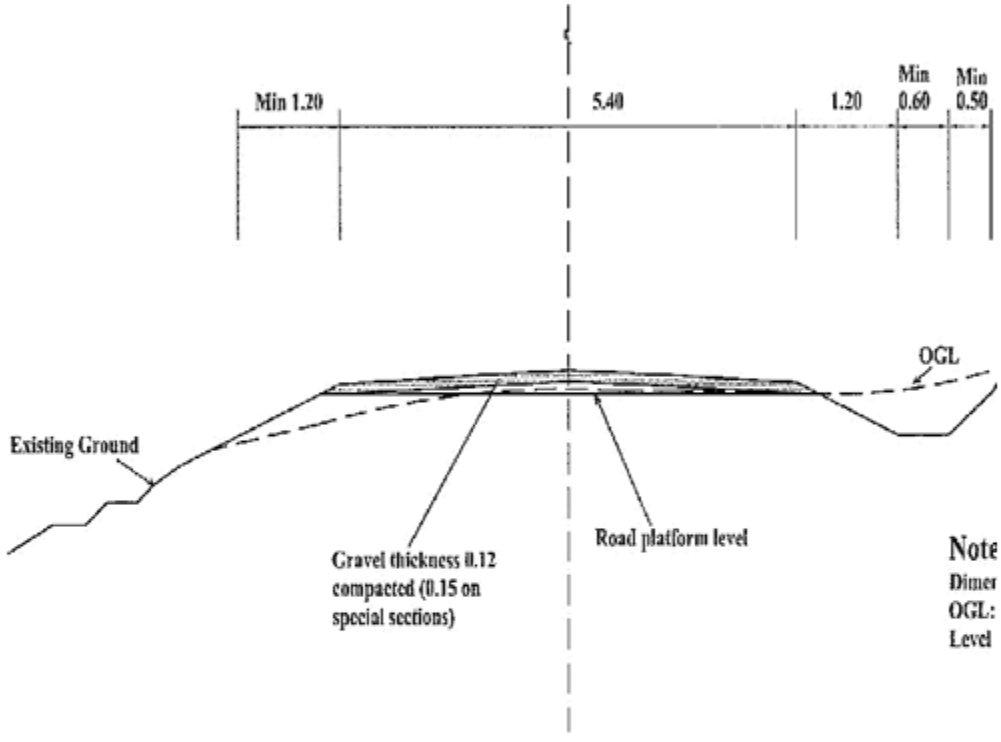
Min 1.20
5.40
1.20
Min
0.60
Min
0.50
OGL
Existing Ground
Gravel thickness 0.12
compacted (0.15 on
special sections)
Road platform level
Note
Dimer
OGL:
Level

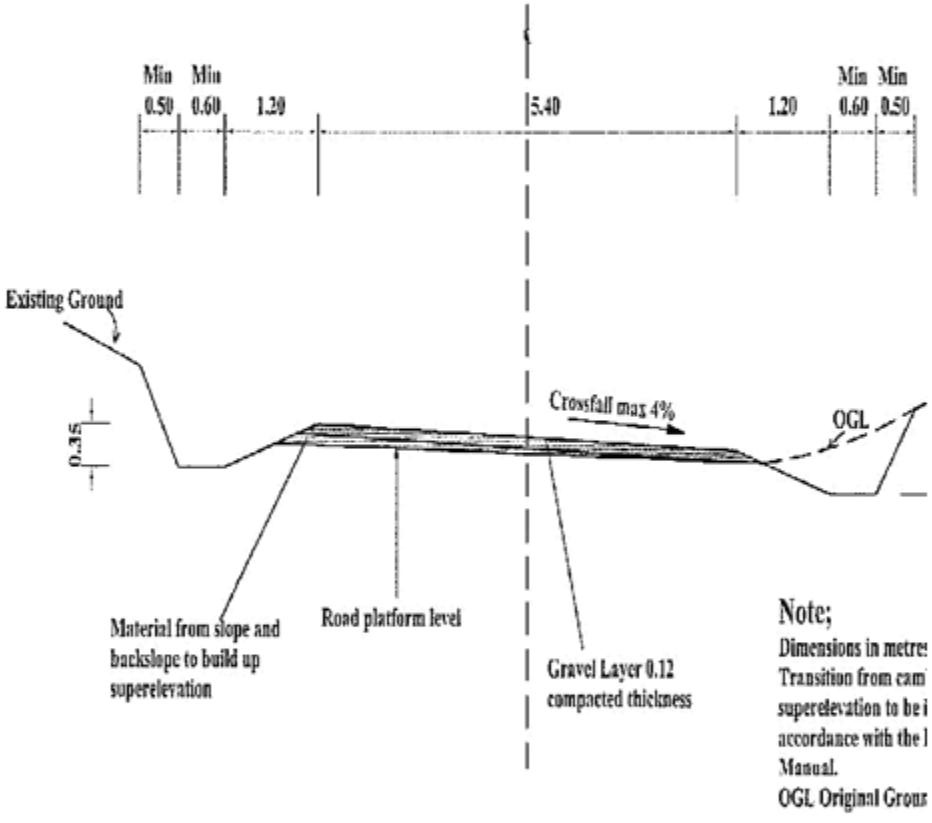
Min
0.50
Min
0.60
1.20
5.40
1.20
Min
0.60
Min
0.50
Existing Ground
0.35
Crossfall max 4%
OGL
Material from slope and backslope to build up superelevation
Road platform level
Gravel Layer 0.12 compacted thickness
Note;
Dimensions in metre
Transition from cam
superelevation to be i
accordance with the l
Manual.
OGL Original Grou

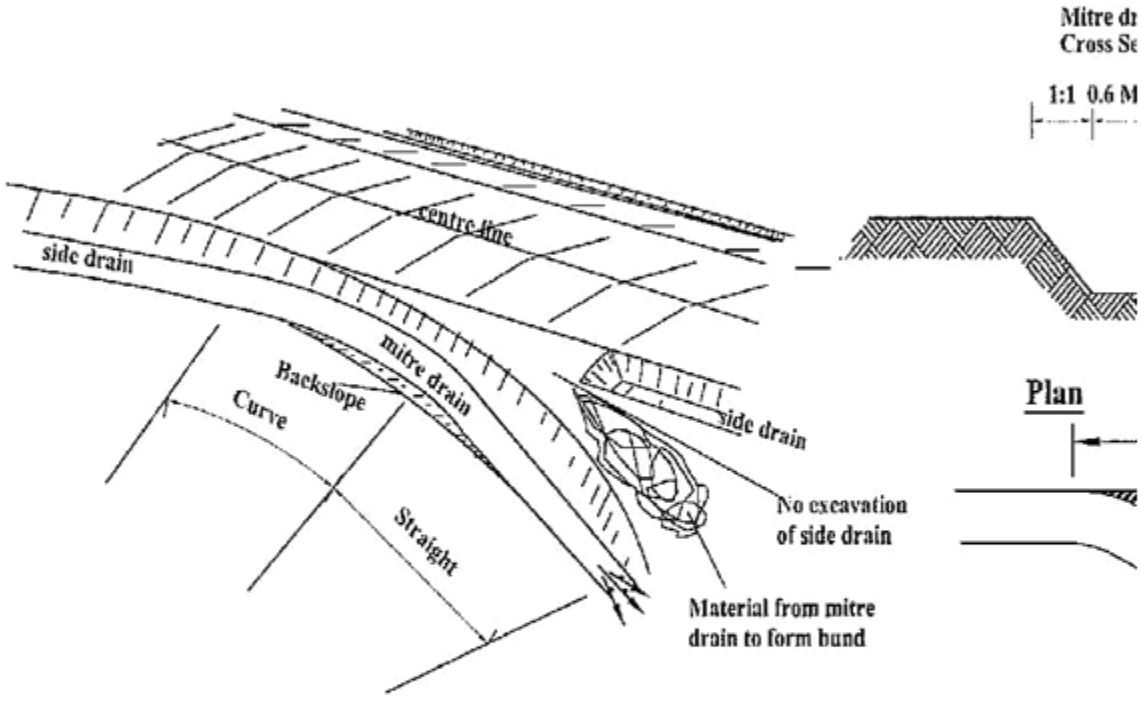

Notes

Location,direction and length of th
by the Engineer

C-6

BILL 22: DAYWORKS

ITEMS 22-50-001 to 22-79-018 are for the Schedule of Rates. The Engineer will include the relevant items for each specific contract document.

A Provisional Sum shall be included in the Bills of Quantities to cover the payment of equipment, labour and materials for work instructed by the Engineer on a Day works basis.

The Contractor shall include prices for all items in the Schedule of Rates, in the Day works Bill, and shall carry out work using these rates only if directed by the Engineer.

Measurement and Payment

a. Equipment:

   Payment for equipment shall only be made for the time each item of equipment is working. Idle time due to breakdown or incompleteness of the equipment shall not be paid. The rate of equipment shall include for the cost of the following:-

i. Transport of the equipment to the site
ii. Operators , drivers and assistants including their overtime
iii. Fuels and lubricants
iv. Maintenance, spare parts and all costs of repairs
v. Depreciation, insurance, overheads and profits.

b. Labour

   Payment shall only be made for the time each of worker working on the Dayworks as instructed by the Engineer. The rate for labour shall include the cost of,

i. All wages, allowances and other payments due to the worker
ii. Provision of small tools used on Dayworks activities by labourers and tradesmen.
iii. Insurance, overheads and profit.

c. Materials

   Payment shall only be made for materials instructed by the Engineer for use in Dayworks activities. The rate for materials shall include for the cost of provision of the material, transport to site, storage, handling, overheads and profits.

Schedule of Dayworks

The Engineer shall compile a Schedule of the Equipment, Labour and Materials which may apply to Dayworks activities, to be included in the Dayworks Bill.

PREAMBLE TO BILLS OF QUANTITIES

1. The Bills of Quantities form part of the Contract Documents and are to be read in conjunction with the Instructions to Tenderers and these Documents.

2. The prices and rates to be inserted in the Bills of Quantities are to be the full, inclusive value of the work described under the several items including all costs and expenses which may be required in and for the execution of the work described and for the Contractor's overheads and profits. The rates shall be VAT exclusive but include all other taxes, levies and fees applicable. The rates shall be based on the Works being carried out in accordance with the R2000 Strategy of using optimum labour resources.

3. Each item in the Bills of Quantities contains only a brief description of the required work. Fuller details and descriptions of the work to be done, the materials to be used, the standards of workmanship, methods of measurement and payment are to be found in the various sections of the Specifications and on the Drawings.

The Quantities set out in the Bills of Quantities are estimated and represent substantially the work to be carried out. There is no guarantee that the Contractor will be required to carry out all the quantity of work indicated under any one particular item or group of items in the Bills of Quantities. The basis of payment shall be the Contractor's rates and the quantities of measured work done in fulfilment of the obligations under the Contract.

BILL OF QUANTITIES

UPGRADING OF NKUBU MARKET IN NKUENE WARD

Name of the Road
NKUBU MARKET

Bill of Quantities					Page: 1	
Bill No.1	PRELIMINARIES				Project:	
Item No.	Description	Units	Quantity	Unit Bid Rate(Ksh)	Amount KSh	Technology
01-60-001	General: Office administration and overheads/Preliminaries	ITEM	0.05	48112025.00	2405601.25	
01-60-005	Provide and erect publicity sign board as directed by the engineer	No	1	50,000	50,000	LB
01-50-007	A prime cost sum for provision of survey works	PC SUM	1	100,000	100,000	LB/MB
01-70-005	Material testing	PC SUM	1	100,000	100,000	LB/MB
01-80-028	Allow for Environmental Management (ESIA)	ITEM	0.01	48112025.00	481,120.25	LB/MB
01-80-034	HIV Awareness Program	PCSUM	1	200,000	200,000	LB/MB
	Total Carried Forward to Summary:				**3,336,721.50**	

Bill of Quantities					Page: 2	
Bill No.5	EARTHWORKS				Project:	
Item No.	Description	Units	Quantity	Unit Bid Rate(Ksh)	Amount KSh	Technology
05-50-015	Grassing-planting of springs of approved indigenous grass types; to embankments, cuttings or where directed by the Engineer In accordance with the specifications, including the grass is firm and established. Tending, watering and cutting until	M^2	400			LB
05-50-016	Scarify water and compact existing ground to at least 95%MDD (AASHTOT99) to a depth of 150mm below ground level.	M^3	1687.5			MB
05-50-008	Cut to spoil in soft	M^3 +	4033.5			MB
05-50-006	Fill in soft material prosess and compact	M^3	390			MB
	Total Carried Forward to Summary:					

Bill of Quantities					Page: 3	
Bill No.8	CULVERT AND DRAINAGE WORKS				Project:	
Item No.	Description	Units	Quantity	Unit Bid Rate(Ksh)	Amount KSh	Technology
08-60-025	Excavate, provide, lay and install 600mm diameter culvert pipes including aprons, head and wing walls concrete beds	M	14			LB
08-60-027	Excavate, provide, lay and install 900mm diameter culvert pipes including aprons, head and wing walls concrete beds	M	20			LB
08-70-001	Provide stone pitching using 150x200mm natural quarry building stones(machine cut)	M^2	1536			LB
08-70-018	Provide and lay precast shallow drain of 600X900 mm as directed by the engineer	M	400			LB
	Total Carried Forward to Summary:					

Bill of Quantities					Page: 4	
Bill No.12	NATURAL MATERIAL BASES AND SUBBASE				Project:	
Item No.	Description	Units	Quantity	Unit Bid Rate(Ksh)	Amount KSh	Technology
12-50-001	Provide, lay and compact Hand packed stone material including voids with stone dust as directed by the Engineer.	M^3	1687.5			LB
	Total Carried Forward to Summary:					

Bill of Quantities					Page: 5	
Bill No.20	ROAD FURNITURE REPAIR AND MAINTENANCE				Project:	
Item No.	Description	Units	Quantity	Unit Bid Rate(Ksh)	Amount KSh	Technology
20-50-018	Ornamental trees (600<>900)mm diameter	NO	35			LB
20-50-018	Tree protection structure to Engineers details.	KSH	35			LB
20-50-012	Excavate for, provide and place 250x125mm class 25/20 precast concrete kerbs haunched in 100mm thick class 15/20 bedding and mortar joined in support to bus bays and junction a)Straight kerbs	M	1505			LB
	Ditto 20-50-012 but 100x125mm flush kerbs	M	1745			LB
	Total Carried Forward to Summary:					

Bill of Quantities					Page: 6	
Bill No.21	MISCELLANEOUS BRIDGE/DRIFT WORKS				Project:	
Item No.	Description	Units	Quantity	Unit Bid Rate(Ksh)	Amount KSh	Technology
21-60-009	Provide, Place and install class 41PVC pipes of diameter 225mm for service ducts by the Engineer	M	159			LB
	Total Carried Forward to Summary:					

Bill of Quantities					Page: 7	
Bill No.23	DAYWORKS				Project:	
Item No.	Description	Units	Quantity	Unit Bid Rate(Ksh)	Amount KSh	Technology
23-02-001	Supply, lay and compact 80mm thick precast concrete paving block with 49N/MM^2 Cube classing strength conforming to BS 6717 PART 1 of 1986 or Kenya bureau of standard equivalent including 30mm thick sand/quarry dust.	M^2	11250			LB
	Total Carried Forward to Summary:					

	Summary	Project:
Item No.	Description	Amount (Kshs)
Bill No.1	PRELIMINARIES	3,336,721.50
Bill No.5	EARTHWORKS	
Bill No.8	CULVERT AND DRAINAGE WORKS	
Bill No.12	NATURAL MATERIAL BASES AND SUBBASE	
Bill No.20	ROAD FURNITURE REPAIR AND MAINTENANCE	
Bill No.21	MISCELLANEOUS BRIDGE/DRIFT WORKS	
Bill No.23	DAYWORKS	
	SUB TOTAL	
	VAT INCLUSIVE (16%)	-
	TOTAL	
	Total Carried to page on the form of Tender	

SECTION VIII – STANDARD FORMS

FORM OF INVITATION FOR TENDERS

_____*[date]*

To: _____ *[name of Contractor]*
_____*[address]*
_____
_____

Dear Sirs:

*Reference:*_____*[Contract Name]*

You have been prequalified to tender for the above project.

We hereby invite you and other prequalified tenderers to submit a tender for the execution and completion of the above Contract.

A complete set of tender documents may be purchased by you from ____
_____
[mailing address, cable/telex/facsimile numbers].

Upon payment of a non-refundable fee of Kshs _____

All tenders must be accompanied by _____number of copies of the same and a security in the form and amount specified in the tendering documents, and must be delivered to
_____
[address and location]

at or before _____*(time and date).* Tenders will be opened immediately thereafter, in the presence of tenderers' representatives who choose to attend.

Please confirm receipt of this letter immediately in writing by cable/facsimile or telex.

Yours faithfully,

_____ Authorised Signature

_____ Name and Title

FORM OF TENDER

TO: _____*[Name of Employer)* _____*[Date]*

_____*[Name of Contract]*

Dear Sir,

1. In accordance with the Conditions of Contract, Specifications, Drawings and Bills of Quantities for the execution of the above named Works, we, the undersigned offer to construct, install and complete such Works and remedy any defects therein for the sum of Kshs._____*[Amount in figures]*Kenya Shillings_____ _____*[Amount in words]*

2. We undertake, if our tender is accepted, to commence the Works as soon as is reasonably possible after the receipt of the Project Manager's notice to commence, and to complete the whole of the Works comprised in the Contract within the time stated in the Appendix to Conditions of Contract.

3. We agree to abide by this tender until _____*[Insert date],* and it shall remain binding upon us and may be accepted at any time before that date.

4. Unless and until a formal Agreement is prepared and executed this tender together with your written acceptance thereof, shall constitute a binding Contract between us.

5. We understand that you are not bound to accept the lowest or any tender you may receive.

Dated this _____ day of _____20_____

Signature _____in the capacity of_____

duly authorized to sign tenders for and on behalf of
_____*[Name of Employer]*
of_____[*Address of Employer]*

Witness; Name_____

Address_____

Signature_____

Date_____

LETTER OF ACCEPTANCE

[Letterhead paper of the Employer]

_____*[date]*

To: _____
[name of the Contractor]

_____
[address of the Contractor]

Dear Sir,

This is to notify you that your Tender dated _____
for the execution of _____
[name of the Contract and identification number, as given in the Tender documents] for the Contract Price of Kshs. _____ *[amount in figures]*[Kenya Shillings_____*(amount in words)*] in accordance with the Instructions to Tenderers is hereby accepted.

You are hereby instructed to proceed with the execution of the said Works in accordance with the Contract documents.

Authorized Signature ……

Name and Title of Signatory ……

Attachment : Agreement

FORM OF AGREEMENT

THIS AGREEMENT, made the _____ day of _____ 20 _____ between_____of[or whose registered office is situated at]_____
(hereinafter called "the Employer") of the one part AND
_____of[or whose registered office is situated at]_____
(hereinafter called "the Contractor") of the other part.

WHEREAS THE Employer is desirous that the Contractor executes
_____
(name and identification number of Contract) (hereinafter called "the Works") located at_____*[Place/location of the Works*]and the Employer has accepted the tender submitted by the Contractor for the execution and completion of such Works and the remedying of any defects therein for the Contract Price of Kshs_____[*Amount in figures*],Kenya Shillings_____[*Amount in words].*

NOW THIS AGREEMENT WITNESSETH as follows:

1. In this Agreement, words and expressions shall have the same meanings as are respectively assigned to them in the Conditions of Contract hereinafter referred to.

2. The following documents shall be deemed to form and shall be read and construed as part of this Agreement i.e.

   (i) Letter of Acceptance

   (ii) Form of Tender

   (iii) Conditions of Contract Part I

   (iv) Conditions of Contract Part II and Appendix to Conditions of Contract

   (v) Specifications

   (vi) Drawings

   (vii) Priced Bills of Quantities

3. In consideration of the payments to be made by the Employer to the Contractor as hereinafter mentioned, the Contractor hereby covenants with the Employer to execute and complete the Works and remedy any defects therein in conformity in all respects with the provisions of the Contract.

4. The Employer hereby covenants to pay the Contractor in consideration of the execution and completion of the Works and the remedying of defects therein, the Contract Price or such other sum

as may become payable under the provisions of the Contract at the times and in the manner prescribed by the Contract.

IN WITNESS whereof the parties thereto have caused this Agreement to be executed the day and year first before written.

The common Seal of _____

Was hereunto affixed in the presence of _____

Signed Sealed, and Delivered by the said _____

Binding Signature of Employer _____

Binding Signature of Contractor _____

In the presence of (i) Name_____

Address_____

Signature_____

[ii] Name _____

Address_____

Signature_____

FORM OF TENDER SECURITY

WHEREAS ……(hereinafter called "the Tenderer") has submitted his tender dated …… for the construction of …… …… *(name of Contract)*

KNOW ALL PEOPLE by these presents that WE …… having our registered office at ……(hereinafter called "the Bank"), are bound unto ……(hereinafter called "the Employer") in the sum of Kshs…… for which payment well and truly to be made to the said Employer, the Bank binds itself, its successors and assigns by these presents sealed with the Common Seal of the said Bank this …… Day of ……20……

THE CONDITIONS of this obligation are:

1. If after tender opening the tenderer withdraws his tender during the period of tender validity specified in the instructions to tenderers
   Or

2. If the tenderer, having been notified of the acceptance of his tender by the Employer during the period of tender validity:

   (a) fails or refuses to execute the form of Agreement in accordance with the Instructions to Tenderers, if required; or
   (b) fails or refuses to furnish the Performance Security, in accordance with the Instructions to Tenderers;
   (c) Rejects a correction or an arithmetic error in the tender.

   We undertake to pay to the Employer up to the above amount upon receipt of his first written demand, without the Employer having to substantiate his demand, provided that in his demand the Employer will note that the amount claimed by him is due to him, owing to the occurrence of one or both of the two conditions, specifying the occurred condition or conditions.

   This guarantee will remain in force up to and including thirty (30) days after the period of tender validity, and any demand in respect thereof should reach the Bank not later than the said date.

[date[	*[signature of the Bank]*
[witness]	*[seal]*

(Amend accordingly if provided by the Insurance Company)

PERFORMANCE BANK GUARANTEE (UNCONDITIONAL)

To: _____(*Name of Employer*) _____*(Date)*
_____(*Address of Employer)*

Dear Sir,

WHEREAS _____(hereinafter called "the Contractor") has undertaken, in pursuance of Contract No. _____ dated _____ to execute _____ (hereinafter called "the Works");

AND WHEREAS it has been stipulated by you in the said Contract that the Contractor shall furnish you with a Bank Guarantee by a recognised bank for the sum specified therein as security for compliance with his obligations in accordance with the Contract;

AND WHEREAS we have agreed to give the Contractor such a Bank Guarantee:

NOW THEREFORE we hereby affirm that we are the Guarantor and responsible to you, on behalf of the Contractor, up to a total of Kshs. _____ (*amount of Guarantee in figures*) Kenya Shillings_____ (*amount of Guarantee in words*), and we undertake to pay you, upon your first written demand and without cavil or argument, any sum or sums within the limits of Kenya Shillings _____ (*amount of Guarantee in words*) as aforesaid without your needing to prove or to show grounds or reasons for your demand for the sum specified therein.

We hereby waive the necessity of your demanding the said debt from the Contractor before presenting us with the demand.

We further agree that no change, addition or other modification of the terms of the Contract or of the Works to be performed there under or of any of the Contract documents which may be made between you and the Contractor shall in any way release us from any liability under this Guarantee, and we hereby waive notice of any change, addition, or modification.

This guarantee shall be valid until the date of issue of the Certificate of Completion.

SIGNATURE AND SEAL OF THE GUARANTOR _____

Name of Bank _____

Address _____

Date _____
(*Amend accordingly if provided by Insurance Company)*

BANK GUARANTEE FOR ADVANCE PAYMENT

To: _____ *[name of Employer]* _____ *(Date)*
_____*[address of Employer]*
Gentlemen,

Ref: _____*[name of Contract]*

In accordance with the provisions of the Conditions of Contract of the above-mentioned Contract, We,_____*[name and Address of Contractor]* (hereinafter called "the Contractor") shall deposit with _____*[name of Employer]* a bank guarantee to guarantee his proper and faithful performance under the said Contract in an amount of Kshs._____*[amount of Guarantee in figurers]* Kenya Shillings_____*[amount of Guarantee in words].*

We, _____[*bank or financial institution*], as instructed by the Contractor, agree unconditionally and irrevocably to guarantee as primary obligator and not as Surety merely, the payment to _____[*name of Employer*] on his first demand without whatsoever right of objection on our part and without his first claim to the Contractor, in the amount not exceeding Kshs_____[*amount of Guarantee in figures*] Kenya Shillings _____[*amount of Guarantee in words*], such amount to be reduced periodically by the amounts recovered by you from the proceeds of the Contract.

We further agree that no change or addition to or other modification of the terms of the Contract or of the Works to be performed there under or of any of the Contract documents which may be made between _____[*name of Employer*] and the Contractor, shall in any way release us from any liability under this guarantee, and we hereby waive notice of any such change, addition or modification.

No drawing may be made by you under this guarantee until we have received notice in writing from you that an advance payment of the amount listed above has been paid to the Contractor pursuant to the Contract.

This guarantee shall remain valid and in full effect from the date of the advance payment under the Contract until _____(*name of Employer*) receives full payment of the same amount from the Contract.

Yours faithfully,

Signature and Seal _____

Name of the Bank or financial institution _____

Address _____

Date _____

Witness: Name: _____

Address: _____

Signature: _____

Date: _____

1. TENDER QUESTIONNAIRE

Please fill in block letters.

1. Full names of tenderer

.....

2. Full address of tenderer to which tender correspondence is to be sent (unless an agent has been appointed below)

.....

3. Telephone number (s) of tenderer

.....

4. Telex address of tenderer

.....

5. Name of tenderer's representative to be contacted on matters of the tender during the tender period

.....

6. Details of tenderer's nominated agent (if any) to receive tender notices. This is essential if the tenderer does not have his registered address in Kenya (name, address, telephone, telex)

.....

Signature of Tenderer

Make copy and deliver to :_____(*Name of Employer*)

CONFIDENTIAL BUSINESS QUESTIONNAIRE

You are requested to give the particulars indicated in Part 1 and either Part 2 (a), 2 (b) or 2 (c) and 2 (d) whichever applies to your type of business.

You are advised that it is a serious offence to give false information on this Form.

Part 1 – General

Business Name ……

Location of business premises; Country/Town……

Plot No…… Street/Road ……

Postal Address…… Tel No……..

Nature of Business……..

Current Trade Licence No…… Expiring date……

Maximum value of business which you can handle at any time: K. pound……..

Name of your bankers……

Branch……

Part 2 (a) – Sole Proprietor

Your name in full…… Age……

Nationality…… Country of Origin……

*Citizenship details ……

Part 2 (b) – Partnership

Give details of partners as follows:

	Name in full	*Nationality*	*Citizenship Details*	*Shares*
1				
2				
3				

Part 2(c) – Registered Company:

Private or public……

State the nominal and issued capital of the Company-

Nominal Kshs……

Issued Kshs……

Give details of all directors as follows:

Name in full . Nationality. Citizenship Details*. Shares.

1.
……
2.
……
3.
……
4.
……

Part 2(d) – Interest in the Firm:

Is there any person / persons in …… ……(*Name of Employer)* who has interest in this firm? Yes/No……(*Delete as necessary*)

I certify that the information given above is correct.

……	……	……
(Title)	*(Signature)*	*(Date)*

* Attach proof of citizenship

STATEMENT OF FOREIGN CURRENCY REQUIREMENTS

(See Clause 60[5] of the Conditions of Contract)

In the event of our Tender for the execution of_____ _____(*name of Contract*) being accepted, we would require in accordance with Clause 21 of the Conditions of Contract, which is attached hereto, the following percentage:

(Figures)…… (Words)……

of the Contract Sum, (Less Fluctuations) to be paid in foreign currency.

Currency in which foreign exchange element is required:

……
…

Date: The …… Day of …….. 20……

Enter 0% (zero percent) if no payment will be made in foreign currency.

Maximum foreign currency requirement shall be _____(percent) of the Contract Sum, less Fluctuations.

_____
(Signature of Tenderer)

SCHEDULE OF MATERIALS;-BASIC PRICES

(Ref: Clause 70 of Conditions of Contract)

MATERIAL	UNIT	ORIGIN AND PRICE			TRANSPORTATION COST FROM SOURCE OF ORIGIN	
		COUNTRY OF ORIGIN	SUPPLIER	PRICE	MODE	PRICE (KSHS)
Cement	Mg					
Lime	Mg					
Sand	Mg					
Aggregate	Mg					
Diesel	L					
Regular Petrol	L					
Super Petrol	L					
Kerosene	L					
Structural steel	Mg					
Gabion Mesh	M2					
Reinforcement Steel	Mg					
Explosives	Kg					
Oil and Lubricants	L					
Bitumen Emulsion A3	L					
Bitumen Emulsion A4	L					
Bitumen Emulsion K1	L					
Bitumen Emulsion K3	L					
Bitumen 80/100	Kg					
Bitumen MC 30	ML					
Bitumen MC 70	L					
Bitumen MC 3000	L					
Ammonium nitrate for blasting	Kg					

I certify that the above information is correct.

…… …… ……

(Title) *(Signature)* *(Date)*

The prices inserted above shall be those prevailing 30 days before the submission of Tenders and shall be quoted in Kenya Shillings using the exchange rates specified in the Appendix to Form of Tender.

Prices of imported materials to be quoted CIF Mombasa or Nairobi as appropriate depending on whether materials are imported by the tenderer directly or through a local agent.

Transportation costs for imported materials to be quoted from Mombasa or Nairobi as appropriate to _____ (Contract Site) depending on whether materials are imported directly by the tenderer or through a local agent.

SCHEDULE OF LABOUR:- BASIC RATES

(Reference: Clause 70 of Conditions of Contract)

LABOUR CATEGORY	UNIT (MONTH/SHIFT/HOUR)	RATES

Categories to be generally in accordance with those used by the Kenya Building Construction and Engineering and Allied Trades Workers' Union.

SCHEDULE OF THE PROPOSED APPROPRIATE EQUIPMENT.

Mandatory minimum number of equipment required by the Employer for the execution of the project that the bidder must make available for the Contract

Item No.	Equipment Details	Minimum Number Required	No of Equipment Owned by the Bidder	No. of equipment to be hired
1	Grader	1		
2	Tippers payload 10 – 20 tonnes	2		
3	Water tankers (10,000 litres capacity)	1		
4	Concrete mixer	1		
5	Shovel	1		
6	Drum roller	1		

The Bidder must attach certified copies of log books or lease agreement of the following

I certify that the above information is correct.

…… …… ……..

(Title) (Signature) (Date)

DETAILS OF SUB-CONTRACTORS

If the Tenderer wishes to sublet any portions of the Works under any heading, he must give below details of the sub-contractors he intends to employ for each portion.

Failure to comply with this requirement may invalidate the tender.

(1) Portion of Works to be sublet:
……

[i) Full name of Sub-contractor
and address of head office: ……

……

(ii) Sub-contractor's experience
of similar works carried out
in the last 3 years with
Contract value: ……

……

……

(2) Portion of Works to sublet: ……

(i) Full name of sub-contractor
and address of head office: ……

……

……

(ii) Sub-contractor's experience
of similar works carried out
in the last 3 years with
contract value: ……

……

_____ _____
[Signature of Tenderer) Date

CERTIFICATE OF TENDERER'S VISIT TO SITE

This is to certify that

[*Name/s*]……

……

Being the authorized representative/Agent of *[Name of Tenderer]*
……

……

participated in the organized inspection visit of the site of the works for the **(Name of Contract:** ……)

…… day of……20……

Signed……
(Employer's Representative)

……

NOTE: This form is to be completed whether the site visit is made at the time of the organized site or privately organized.

FORM OF WRITTEN POWER-OF-ATTORNEY

The Tenderer consisting of a joint venture shall state here below the name and address of his representative who is authorised to receive on his behalf correspondence in connection with the Tender.

……
(Name of Tenderer's Representative in block letters)

……
(Address of Tenderer's Representative)

……
(Signature of Tenderer's Representative)

KEY PERSONNEL

DESIGNATION	NAME	NATIONALITY	SUMMARY OF QUALIFICATIONS AND EXPERIENCE
Headquarters: 1. Director 2. 3. 4. 5. etc.			
Site Office: 1. Site Superintendent 2. 3. 4. 5. etc.			

I certify that the above information is correct.

……	……	……..
(Title)	*(Signature)*	*(Date)*

SCHEDULE OF COMPLETED CIVIL WORKS CARRIED OUT BY THE TENDERER IN THE LAST EIGHT YEARS

DESCRIPTION OF WORKS AND CLIENT	TOTAL VALUE OF WORKS (KSHS)	CONTRACT PERIOD (YEARS)	YEAR COMPLETED

I certify that the above Civil Works were successfully carried out and completed by ourselves.

……	……	……
(Title)	*(Signature)*	*(Date)*

*Value in Kshs using Central Bank of Kenya mean exchange rate at a reference date 30 days before date of tender opening.

SCHEDULE OF ONGOING PROJECTS

DESCRIPTION OF WORK AND CLIENT	CONTRACT PERIOD	DATE OF COMMEN-CEMENT	DATE OF COMPLETION	TOTAL VALUE OF WORKS (KSHS.)	PERCENTAGE COMPLETED TO DATE

I certify that the above Civil Works are being carried out by ourselves and that the above information is correct.

…… …… ……
(Title) *(Signature)* *(Date)*

OTHER SUPPLEMENTARY INFORMATION

1. Financial reports for the last five years, balance sheets, profit and loss statements, auditors' reports etc. List them below and attach copies.
   ……
   ……
   ……

2. Evidence of access to financial resources to meet the qualification requirements. Cash in hand, lines of credit etc. List below and attach copies of supporting documents
   ……
   ……
   ……

3. Name, address , telephone, telex, fax numbers of the Tenderer's Bankers who may provide reference if contacted by the Employer.
   ……
   ……
   ……

4. Information on current litigation in which the Tenderer is involved.

OTHER PARTY (IES)	CAUSE OF DISPUTE	AMOUNT INVOLVED (KSHS)

I certify that the above information is correct.

…… ……
……
Title *Signature* *Date*

DECLARATION FORM

Date _____

To _____
_____
_____

The tenderer i.e. (name and address)_____
_____declare the following:

a) Has not been debarred from participating in public procurement.

b) Has not been involved in and will not be involved in corrupt and fraudulent practices regarding public procurement.

_____	_____	_____
Title	Signature	Date

(To be signed by authorized representative and officially stamped)

LETTER OF NOTIFICATION OF AWARD

Address of Procuring Entity

_____

_____

To:_____

_____

_____

_____

RE: Tender No._____

Tender Name_____

This is to notify that the contract/s stated below under the above mentioned tender have been awarded to you.

_____

_____

1. Please acknowledge receipt of this letter of notification signifying your acceptance.

2. The contract/contracts shall be signed by the parties within 30 days of the date of this letter but not earlier than 14 days from the date of the letter.

3. You may contact the officer(s) whose particulars appear below on the subject matter of this letter of notification of award.

   *(FULL PARTICULARS)*_____

   _____

SIGNED FOR ACCOUNTING OFFICER

FORM RB 1

REPUBLIC OF KENYA

PUBLIC PROCUREMENT ADMINISTRATIVE REVIEW BOARD

APPLICATION NO……OF……20……..

BETWEEN

…….APPLICANT

AND

……RESPONDENT *(Procuring Entity)*

Request for review of the decision of the…… (*Name of the Procuring Entity)* of ……dated the…day of ……20…….in the matter of Tender No……..…of ……..20…

REQUEST FOR REVIEW

I/We……,the above named Applicant(s), of address: Physical address……Fax No……Tel. No……..Email ……, hereby request the Public Procurement Administrative Review Board to review the whole/part of the above mentioned decision on the following grounds , namely:-

1.

2.

etc.

By this memorandum, the Applicant requests the Board for an order/orders that: -

1.

2.

etc

SIGNED ……(Applicant)

Dated on……day of ……/…20…

FOR OFFICIAL USE ONLY

Lodged with the Secretary Public Procurement Administrative Review Board on …… day of ……...20……

SIGNED

Board Secretary

Supervision Check List (2/2)

Project Title:	
Contractor:	

	Signature
The Engineer's Representative (Project Engineer)	
Resident Engineer	

1. This check list is for Resident Engineer to check contractor's work execution process.
2. Fill in date of checking as (day/month), mark as indicated in Filling Example, and state remarks.
3. Put this check list in the Monthly Progress Report.

Item		Check Point		before	During execution								after	Remarks
				Date /	Date /	Date /	Date /	Date /	Date /	Date /	Date /	Date /	Date /	Reason for unsatisfactory performance (Site diary No.) Corrective order by authority (Date) Excellent point to be specified
6	Quality and quantity management	6-2	Results of material testing, structural examination and measurements are within the specifications.		☐	☐	☐	☐	☐	☐	☐	☐		
		6-3	Results of material testing, structural examination, and measurements are properly compiled as reports for confirmation		☐	☐	☐	☐	☐	☐	☐	☐		
7	Work scheduling	7-1	Understanding of critical path and its reflection on scheduling are proper		☐	☐	☐	☐	☐	☐	☐	☐		
		7-2	Actual proceedings are periodically compared to the planned schedule described in Works Execution Programme		☐	☐	☐	☐	☐	☐	☐	☐		
		7-3	Changes caused by site conditions are properly handled to keep Works on schedule		☐	☐	☐	☐	☐	☐	☐	☐		
		7-4	All works are completed within the contract term or within the extended term as allowed										☐	
8	Work safety management	8-1	No accident occurs to workers, operators, or third-parties.		☐	☐	☐	☐	☐	☐	☐	☐		
		8-2	Safety of workers and operators is considered		☐	☐	☐	☐	☐	☐	☐	☐		
		8-3	Accident prevention efforts for third-parties are proper		☐	☐	☐	☐	☐	☐	☐	☐		
		8-4	Traffic and site safety devices are properly installed and managed		☐	☐	☐	☐	☐	☐	☐	☐		
		8-5	Temporary facilities (e.g. scaffolding) are constantly checked		☐	☐	☐	☐	☐	☐	☐	☐		
9	Environmental and social management	9-1	Environmental and social mitigation efforts (e.g. against noise, vibration, emission, and dust) are conducted		☐	☐	☐	☐	☐	☐	☐	☐		
		9-2	Waste material from site is properly disposed		☐	☐	☐	☐	☐	☐	☐	☐		
		9-3	Damage to existing roads, works and services is avoided or are repaired when it occurs		☐	☐	☐	☐	☐	☐	☐	☐		
		9-4	Transportation by vehicles is properly done with no overloading, and neither material falling, leakage, nor spillage.		☐	☐	☐	☐	☐	☐	☐	☐		

Filling Example : ✓Check point is satisfactory ■ Check point is unsatisfactory N/A Not applicable

Supervision Check List (1/2)

Project Title:	
Contractor:	

	Date	Name	Signature
The Engineer's Representative (Project Engineer)			
Resident Engineer			

1. This check list is for Resident Engineer to check contractor's work execution process.
2. Fill in date of checking as (day/month), mark as indicated in Filling Example, and state remarks.
3. Put this check list in the Monthly Progress Report.

Item		Check Point		before	During execution								after	Remarks
				Date /	Date /	Date /	Date /	Date /	Date /	Date /	Date /	Date /	Date /	Reason for unsatisfactory performance (Site diary No.) Corrective order by authority (Date) Excellent point to be specified
1	Execution system in general	1-1	Works Execution Programme (including its revised version if any) is submitted before the date specified in contract document	☐	☐	☐	☐	☐	☐	☐	☐	☐		
		1-2	Works Execution Programme properly reflects the given specifications and site conditions	☐	☐	☐	☐	☐	☐	☐	☐	☐		
		1-3	Execution procedures are in accordance with Works Execution Programme		☐	☐	☐	☐	☐	☐	☐	☐		
2	Equipment holding	2-1	All equipment used are properly mobilized in accordance with Works Execution Programme		☐	☐	☐	☐	☐	☐	☐	☐		
		2-2	All equipment used is well maintained during the execution of works		☐	☐	☐	☐	☐	☐	☐	☐		
3	Contractor's in-house staff	3-1	Qualified technical staff of contractor are properly assigned as specified in Works Execution Programme		☐	☐	☐	☐	☐	☐	☐	☐		
		3-2	Contractor's in-house key staff understand work process and schedule properly		☐	☐	☐	☐	☐	☐	☐	☐		
		3-3	Contractor's in-house staff give technical guidance and direction to workers and operators properly and timely		☐	☐	☐	☐	☐	☐	☐	☐		
		3-4	Communications with authority in writing is properly and timely		☐	☐	☐	☐	☐	☐	☐	☐		
4	Personnel employment	4-1	Workers and operators are deployed in accordance with Works Execution Programme		☐	☐	☐	☐	☐	☐	☐	☐		
		4-2	Wage payment is properly made on time		☐	☐	☐	☐	☐	☐	☐	☐		
5	Site base facilities	5-1	Office and stockyard are prepared in accordance with Works Execution Programme		☐	☐	☐	☐	☐	☐	☐	☐		
		5-2	Site is well maintained during the work execution and cleared on completion		☐	☐	☐	☐	☐	☐	☐	☐	☐	
		5-3	Material stored on site is properly managed during the work execution		☐	☐	☐	☐	☐	☐	☐	☐		
6	Quality and quantity management	6-1	Material testing, structural examination, and measurements are properly and routinely conducted based on specifications and Works Execution Programme		☐	☐	☐	☐	☐	☐	☐	☐		

Filling Example : ✓Check point is satisfactory ■ Check point is unsatisfactory N/A Not applicable